SONY

DIGITAL MULTI EFFECTS

DME-5000

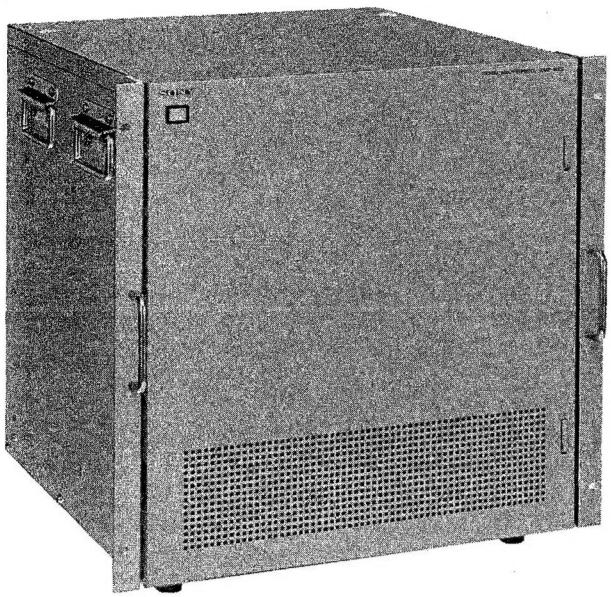

OPERATION AND MAINTENANCE MANUAL

1st Edition

Serial No. 10001 and Higher

For the customers in the U.S.A.

Warning
This equipment generates, uses, and can radiate radio frequency energy and if not installed and used in accordance with the instructions manual, may cause interference to radio communications. It has been tested and found to comply with the limits for a Class A computing device pursuant to Subpart J of Part 15 of FCC Rules, which are designed to provide reasonable protection against such interference when operated in a commercial environment.
Operation of this equipment in a residential area is likely to cause interference in which case the user at his own expense will be required to take whatever measures may be required to correct the interference.

The shielded interface cable recommended in this manual must be used with this equipment in order to comply with the limits for a computing device pursuant to Subpart J of Part 15 of FCC Rules.

For the customers in Canada
This apparatus complies with the Class A limits for radio noise emissions set out in radio interference regulations.

Pour les utilisateurs au Canada
Cet appareil est conforme aux normes Class A, pour bruits radioelectriques. Tel que specifier dans le reglement sur le brouillage radioelectrique.

このマニュアルに記載されている事柄の著作権は当社にあり，説明内容は機器購入者の使用を目的としています。
従って，当社の許可なしに無断で複写したり，説明内容(操作，保守等）と異なる目的で本マニュアルを使用することを禁止します。

The material contained in this manual consists of information that is the property of Sony Corporation and is intended solely for use by the purchasers of the equipment described in this manual.
Sony Corporation expressly prohibits the duplication of any portion of this manual or the use thereof for any purpose other than the operation or maintenance of the equipment described in this manual without the express written permission of Sony Corporation.

Le matériel contenu dans ce manuel consiste en informations qui sont la propriété de Sony Corporation et sont destinées exclusivement à l'usage des acquéreurs de l'équipement décrit dans ce manuel.
Sony Corporation interdit formellement la copie de quelque partie que ce soit de ce manuel ou son emploi pour tout autre but que des opérations ou entretiens de l'équipement à moins d'une permission écrite de Sony Corporation.

Das in dieser Anleitung enthaltene Material besteht aus Informationen, die Eigentum der Sony Corporation sind, und ausschließlich zum Gebrauch durch den Käufer der in dieser Anleitung beschriebenen Ausrüstung bestimmt sind.
Die Sony Corporation untersagt ausdrücklich die Vervielfältigung jeglicher Teile dieser Anleitung oder den Gebrauch derselben für irgendeinen anderen Zweck als die Bedienung oder Wartung der in dieser Anleitung beschriebenen Ausrüstung ohne ausdrückliche schriftliche Erlaubnis der Sony Corporation.

目　次
Table of Contents

1. 取り扱い操作

1-1. 概要 …… 1- 1 (J)
1-1-1. 主な特長 …… 1- 1 (J)
1-1-2. 使用上のご注意 …… 1- 3 (J)
1-2. 各部の名称と働き …… 1- 4 (J)
1-2-1. 前面パネルと内部 …… 1- 4 (J)
1-2-2. 後面パネル …… 1-12 (J)
1-3. システム構成例 …… 1-16 (J)
1-3-1. 専用コントロールパネルおよび入出力機器との接続 …… 1-16 (J)
1-3-2. デジタルビデオスッチャー DVS-8000/8000Cとの接続 …… 1-17 (J)
1-3-3. デジタルマルチエフェクトDME-9000との接続（D1モードの場合） … 1-18 (J)
1-3-4. エディティングコントロールシステムBVE-9000との接続 … 1-19 (J)
1-3-5. デジタルビデオルーティングスイッチャーDVS-V1201との接続 …… 1-20 (J)
1-4. 主な仕様 …… 1-21 (J)

1. OPERATION

1-1. Overview ..... 1 - 1(E)
1-1-1. Principal Features ..... 1 - 1(E)
1-1-2. Important Notes ..... 1 - 2(E)
1-2. Location and Function of Parts ..... 1 - 3(E)
1-2-1. Front Panel and Interior ..... 1 - 3(E)
1-2-2. Connectors on the Rear Panel ..... 1-10(E)
1-3. System Connections ..... 1-13(E)
1-3-1. Connection with Dedicated Control Panel and I/O Equipment ..... 1-13(E)
1-3-2. Connection with DVS-8000/8000C Digital Video Switcher ..... 1-14(E)
1-3-3. Connection with DME-9000 Digital Multi Effects ..... 1-15(E)
1-3-4. Connection with BVE-9000 Editing Control System ..... 1-16(E)
1-3-5. Connection with DVS-V1201 Digital Video Routing Switcher ..... 1-17(E)
1-4. Principal Specifications ..... 1-18(E)

2. 設　置

2-1. 開梱と再梱包 …… 2-1 (J)
2-2. 使用環境 …… 2-2 (J)
2-3. 外形寸法 …… 2-2 (J)
2-4. 電源電圧 …… 2-2 (J)
2-5. 設置時の確認と調整 …… 2-3 (J)
2-5-1. 電源電圧の設定 …… 2-3 (J)
2-5-2. カード基板の設置方法 …… 2-4 (J)
2-6. 接続コネクター …… 2-5 (J)
2-7. コネクターの入出力信号 …… 2-5 (J)
2-8. ラックマウントの方法 …… 2-8 (J)
2-9. 付属アクセサリー …… 2-12 (J)
2-10. 別売アクセサリー …… 2-12 (J)

3. サービスインフォメーション

3-1. 外装の開閉・取り外し …… 3-1 (J)
3-2. プリント基板の配置図 …… 3-2 (J)
3-3. 回路構成 …… 3-3 (J)
3-4. 基板の取り付け・取り外し方法 …… 3-4 (J)
3-5. 延長基板の使い方 …… 3-5 (J)
3-6. サービス部品 …… 3-6 (J)

4. 主要部品の交換

4-1. 主要部品の配置図 …… 4-1 (J)
4-2. スイッチングレギュレーターの交換 …… 4-1 (J)
4-3. DCファンの交換 …… 4-3 (J)

5. テクニカルインフォメーション

5-1. 不良箇所の診断 …… 5-1 (J)
5-2. 自己診断 …… 5-1 (J)

2. INSTALLATION

2-1. UNPACKING AND REPACKING …… 2-1 (E)
2-2. OPERATING ENVIRONMENT …… 2-2 (E)
2-3. EXTERNAL DIMENSIONS …… 2-2 (E)
2-4. POWER VOLTAGE …… 2-2 (E)
2-5. CONFIRMATION AND ADJUSTMENT AT INSTALLATION TIME …… 2-3 (E)
2-5-1. Settiong the Power Voltage … 2-3 (E)
2-5-2. How to Install the Card Boards …… 2-5 (E)
2-6. CONNECTORS …… 2-6 (E)
2-7. INPUT/OUTPUT SIGNALS OF CONNECTOR …… 2-6 (E)
2-8. PACK MOUNTING …… 2-9 (E)
2-9. SUPPLIED ACCESSORIES …… 2-13 (E)
2-10. OPTIONAL ACCESSORIES …… 2-13 (E)

3. SERVICE INFORMATION

3-1. REMOVAL OF PANEL …… 3-1 (E)
3-2. LOCATION OF PRINTED CIRCUIT BOARDS …… 3-2 (E)
3-3. CIRCUIT INFORMATION …… 3-3 (E)
3-4. HOW TO INSTALL AND REMOVE THE BOARDS …… 3-4 (E)
3-5. HOW TO USE THE EXTENSION BOARDS …… 3-5 (E)
3-6. SERVICE PARTS …… 3-6 (E)

4. REPLACEMENT OF MAIN PARTS

4-1. LOCATION OF THE MAIN PARTS … 4-1 (E)
4-2. REPLACEMENT OF THE SWITCHING REGULATORS …… 4-1 (E)
4-3. REPLACEMENT OF THE DC FAN …… 4-3 (E)

5. TECHNICAL INFORMATION

5-1. DEFECTIVE PARTS DIAGNOSTICS … 5-1 (E)
5-2. SELF-DIAGNOSTICS …… 5-2 (E)

6. BLOCK DIAGRAM

OVERALL 6-3
ALU-11 6-5
CPU-82 6-9
DLP-9 6-15
DLP-10 6-19
DPR-15 6-23
DPR-16 6-28
DPR-17 6-37
DPR-18 6-40
MEM-41 6-45

7. SEMICONDUCTOR ELECTORODES

SEMICONDUCTOR ELECTORODES 7-1

8. SCHEMATIC DIAGRAMS

CIRCUIT INFORMATION 8-2
LOCATION OF PRINTED CIRCUIT
BOARD 8-3
ALU-11 8-4
CPU-82 8-23
DLP-9 8-37
DLP-10 8-82
DPR-15 8-104
DPR-16 8-139
DPR-17 8-175
DPR-18 8-201
MEM-41 8-228
CN-456 8-249
CN-462 8-253
CN-463 8-257
MB-305 8-263
FRAME 8-279

9. PRINTED CIRCUIT BOARDS

ALU-11 9-1
CPU-82 9-5
DLP-9 9-11
DLP-10 9-15
DPR-15 9-19
DPR-16 9-23
DPR-17 9-27
DPR-18 9-31
MEM-41 9-35
CN-456 9-39
CN-462 9-39
CN-463 9-43
MB-305 9-47
EX-270 9-51

10. SPARE PARTS

10-1. PARTS INFORMATION 10-1
10-2. EXPLODED VIEW 10-1
  10-2-1. Chassis (1) 10-3
  10-2-2. Chassis (2) 10-5
  10-2-3. Power Unit 10-7
  10-2-4. Rear Panel 10-9
10-3. ELECTRICAL PARTS LIST 10-11

Section 1. OPERATION

1-1. Overview

The DME-5000 digital multi effects produces high image quality effects by all-digital processing. It can be controlled from a BKDM-5070 control panel, or operated together with a DVS-8000/8000C digital video switcher system, and controlled from the same BKDS-8010 control panel as the switcher system.

1-1-1. Principal Features

Serial digital I/O
The unit uses serial digital I/O for all connections, each of which therefore requires only a single coaxial cable. Compared with conventional parallel interfaces, this feature reduces the effort required to set up connections, and the absence of skew timing errors increases reliability and allows longer-distance transmission.

Compatible with both composite and component formats
With four optional I/O boards (BKDM-5010/5011/5012/5013) available, the unit is compatible with all combinations of component and composite, digital and analog formats. When connecting the unit to an existing system, select the optional I/O board suitable for the switcher to be used.

Integrated operation with a DVS-8000 series switcher system
You can connect a DME-5000 unit to a DVS-8000/8000C switcher system, and control both units from a single control panel. This provides an integrated system, operating entirely in digital mode, and yielding perfect picture quality. The high-level DME LINK® function supports effects such as DME wipes, which combine video effects with the switcher wipe function.

Concurrent multichannel operation
You can connect two to four DME-5000 units together and use the same control panel to control up to four channels simultaneously or a selected channel only.

Image combination function
You can connect together two or more DME-5000 units fitted with the BKDM-5020/5021 digital combiner board and combine up to four channels in a single image. This combination function uses special signals containing depth information, which enables highly realistic effects, in which the images can be manipulated in 3-dimensional space.

Automatic switching between frame and field processing
The motion detector automatically switches the unit between frame mode for frame-by-frame image processing and field mode for field-by-field image processing according to the movement of the image. Each frame of image information processed in frame mode is equivalent to two fields of image information, so that the frame mode ensures no degradation of picture quality. To produce a new image using effects, frame mode will enable more precise processing than field mode. However, for processing to realize natural and smooth movement of an image, the field mode will be more suitable than the frame mode.

1-1-2. Important Notes

Handling circuit boards

It should not normally be necessary to remove or replace boards. For maintenance purposes, or when installing optional boards, observe the following precautions:

- Before inserting or removing a board, ensure that the power is switched off (see page 1-4(E)).
- Before turning the power on after inserting a new board, make sure that the number on the board matches that on the slot. See Section 3-4 "How to Install and Remove the Boards" for more details.

These precautions are important to avoid damage to the circuit boards.

Circuit breaker

If a current surge occurs in the unit, the breaker will trip and cut off the power automatically (see page 1-4(E)).
If the power does not come on when you switch on, the breaker may have tripped. Open the front panel and push the BREAKER button in.

1-2. Location and Function of Parts

1-2-1. Front Panel and Interior

Front panel

How to open the front panel

Press the bottom end of each door handle, and pull forward.

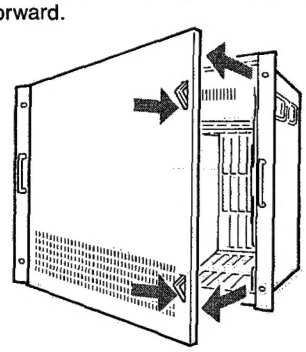

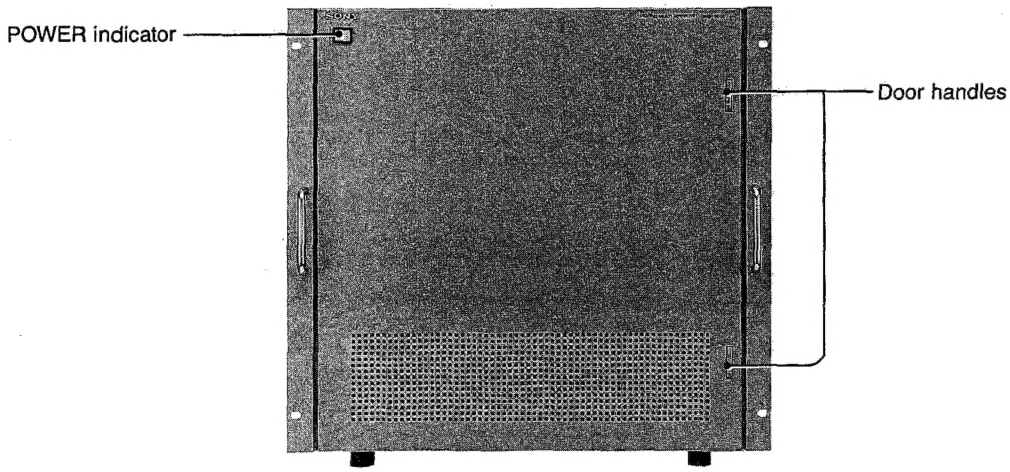

Interior

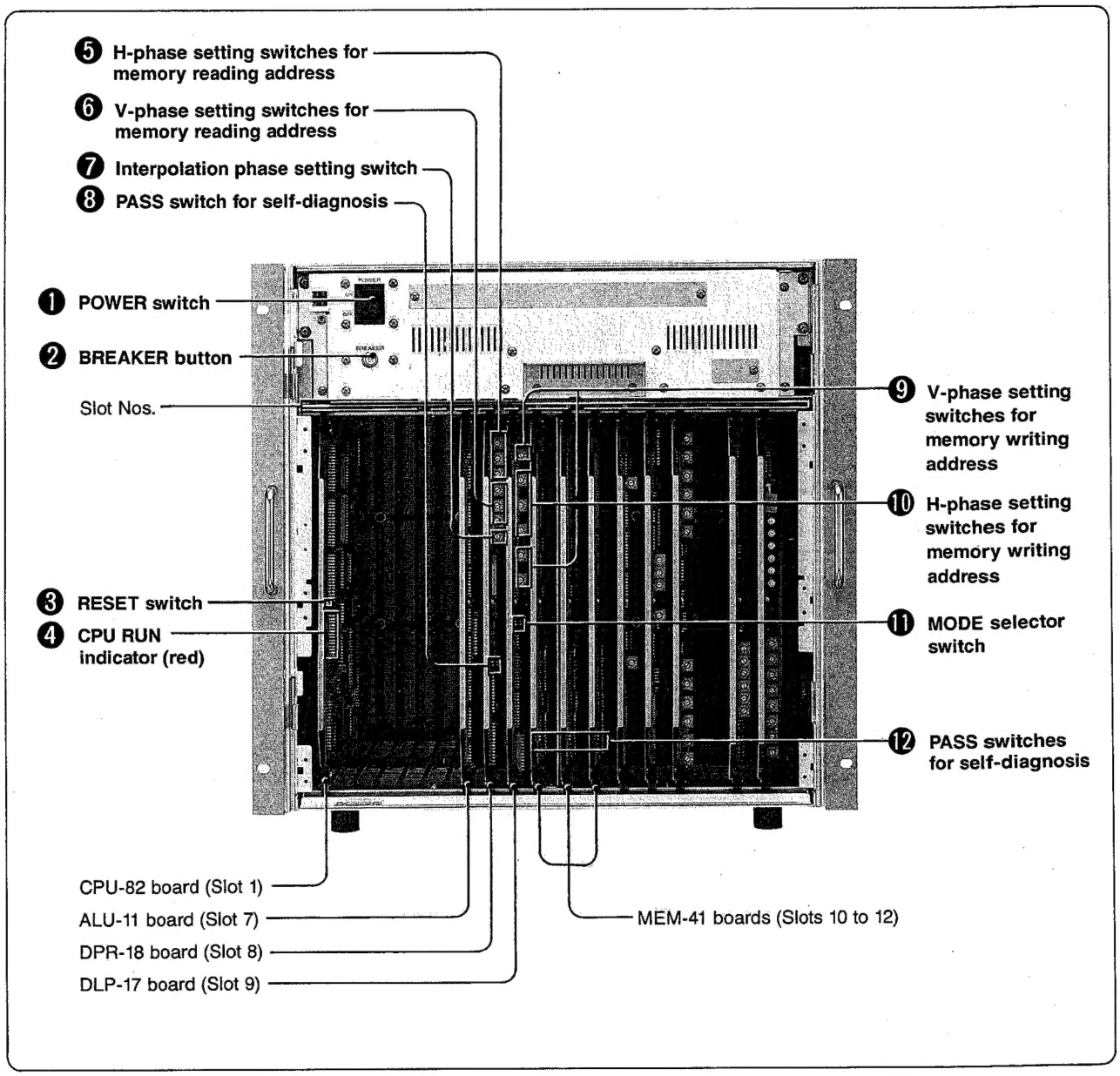
5 H-phase setting switches for memory reading address
6 V-phase setting switches for memory reading address
7 Interpolation phase setting switch
8 PASS switch for self-diagnosis
1 POWER switch
2 BREAKER button
Slot Nos.
3 RESET switch
4 CPU RUN indicator (red)
9 V-phase setting switches for memory writing address
10 H-phase setting switches for memory writing address
11 MODE selector switch
12 PASS switches for self-diagnosis
CPU-82 board (Slot 1)
ALU-11 board (Slot 7)
DPR-18 board (Slot 8)
DLP-17 board (Slot 9)
MEM-41 boards (Slots 10 to 12)

❶ **POWER switch**
Powers the unit on and off.

❷ **BREAKER button**
If an excess current flows in the unit, this button jumps out to cut off the power supply automatically.

❸ **RESET switch**
Resets the CPU of the unit.

❹ **CPU RUN indicator (red)**
Comprises LEDs which flash in sequence while the CPU is operating normally.

❺ **H-phase (horizontal phase) setting switches for memory reading address**
Three dip switches used to set the horizontal phase of the image memory reading address for test purposes. The switches are arranged vertically, with the most significant bit at the top (2-4-4 bits).

❻ **V-phase (vertical phase) setting switches for memory reading address**
Three dip switches used to set the vertical phase of the image memory reading address for test purposes. The switches are arranged vertically, with the most significant bit at the top (1-4-4 bits).

❼ **Interpolation phase setting switch**
Sets the phase of data to be used to interpolate the data read from the image memory. Keep this switch set at 3h.

❽ **PASS switch for self-diagnosis**
Setting bit 1 of this switch to ON causes the internal operation of the DPR-18 and ALU-11/12/13 boards to be entirely skipped. Keep the bit 1 set to OFF except when carrying out self-diagnostic testing of the unit.

❾ **V-phase (vertical phase) setting switches for memory writing address**
Three dip switches used to set the vertical phase of the image memory writing address for test purposes. The switches are arranged vertically, (sandwiched round the H-phase setting switches ❿), with the most significant bit at the top (1-4-4 bits).

❿ **H-phase (horizontal phase) setting switches for memory writing address**
Three dip switches used to set the horizontal phase of the image memory writing address for test purposes. The switches are arranged vertically, with the most significant bit at the top (2-4-4 bits).

⓫ **MODE selector switch**
Consists of two bits used to change the operation modes of the unit as follows:
Bit 1: ON = 525 mode, OFF = 625 mode
Bit 2: ON = D1 mode, OFF = D2 mode
Ensure that the settings of these bits are consistent with the setting of the switch S3 on the CPU-82 board.

⓬ **PASS switch for self-diagnosis**
Setting bit 1 of this switch to ON causes the internal operation of the MEM-41 board to be skipped. Keep bit 1 set to OFF except when carrying out self-diagnostic testing of the unit.

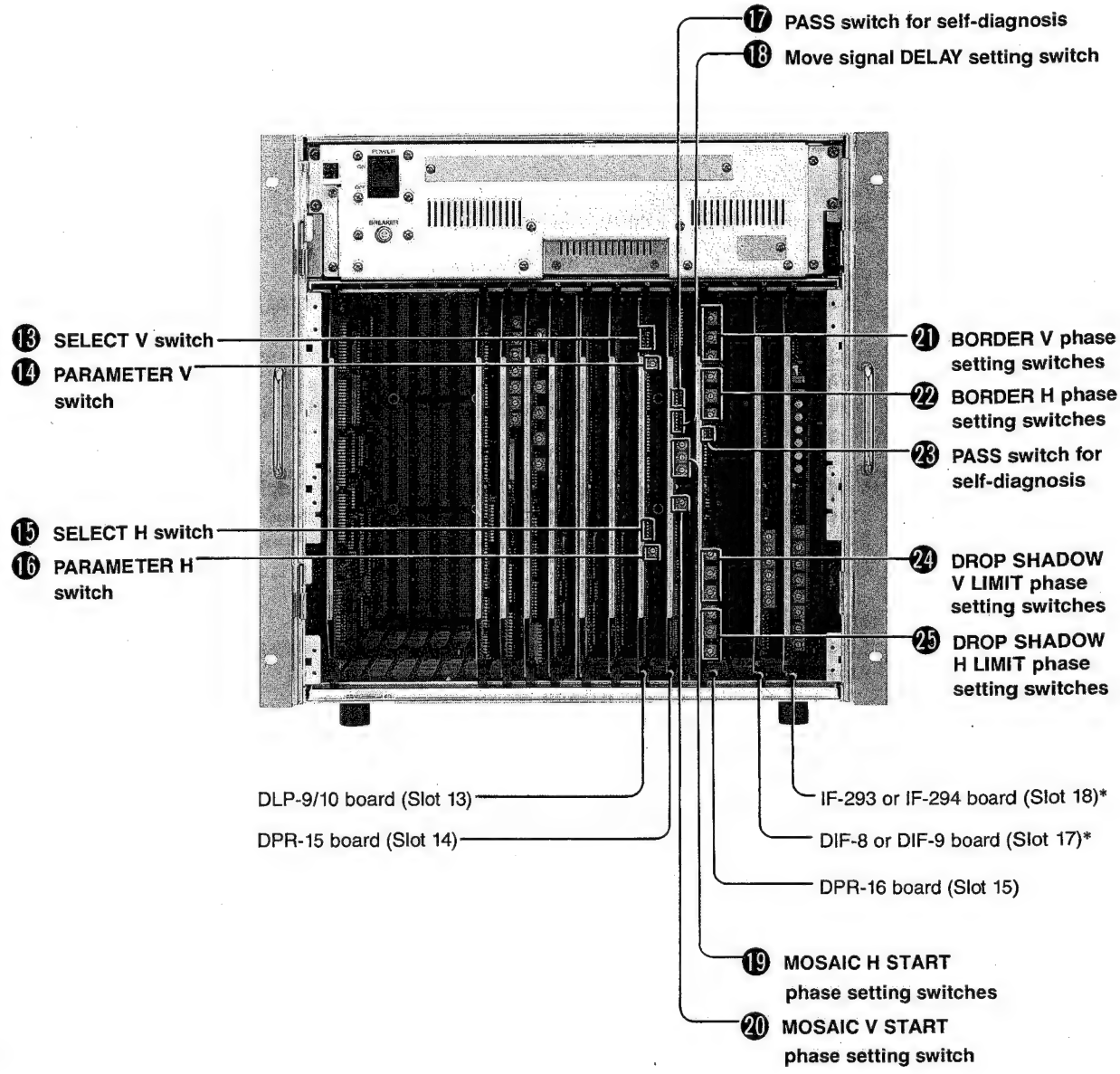

* These are option boards, but since they are video I/O interfaces, this unit will not operate without them. For details, see "Optional boards" on page 1-9(E) and the operation and maintenance manuals for the respective boards.

⓭ **SELECT V (vertical filter parameter) switch**
Four bits, 1 to 4 from the top down, used to set vertical filter parameters as follows:
Bit 1: Turns on/off the DEFOCUS circuit.
Bit 2: Switches the parameter setting mode between manual and automatic.
Bit 3: Selects the parameter setting range of 0-15 steps or 16-32 steps for manual setting mode.
Bit 4: Reserved for future use.

⓮ **PARAMETER V (vertical filter constant) switch**
Sets the vertical filter constant to be applied when the manual setting mode is selected with the SELECT V switch bit 2 ⓭. You can select one of the 16 settings 0-15 or 16-32 depending on the setting of the SELECT V switch bit 3 ⓭.

⓯ **SELECT H (horizontal filter parameter) switch**
Six bits, 1 to 6 from the top down, used to set horizontal filter parameters as follows:
Bit 1: Turns the Y-filter bypass on or off.
Bit 2: Turns the C-filter bypass on or off.
Bit 3: Turns the K-filter bypass on or off.
Bit 4: Switches the parameter setting mode between manual and automatic.
Bit 5: Selects the parameter setting range of 0-15 steps or 16-32 steps for manual setting mode.
Bit 6: Turns the DEFOCUS circuit on or off.

⓰ **PARAMETER H (horizontal filter constant) switch**
Sets the horizontal filter constant to be applied when the manual setting mode is selected with the SELECT H switch bit 4 ⓯. You can select one of the 16 settings 0-15 or 16-32 depending on the setting of the SELECT H switch bit 5 ⓯.

⓱ **PASS switch for self-diagnosis**
Setting bits 1 to 3 of this switch to ON causes the Y, C, and K video signal circuits to be skipped, respectively. Keep the three bits set to OFF except when carrying out self-diagnostic testing.

⓲ **Move signal DELAY setting switch**
Sets the move signal delay. This switch is for use by Sony service personnel only.

⓳ **MOSAIC H (horizontal) START phase setting switches**
Three dip switches used to set the phase of the horizontal start address for mosaic effect generation. The switches are arranged vertically, with the most significant bit at the top (2-4-4 bits). These switches are for use by Sony service personnel.

⓴ **MOSAIC V (vertical) START phase setting switch**
Sets the delay (0H to 15H) for the vertical start address for mosaic effect generation. This switch is for use by Sony service personnel.

㉑ **BORDER V (vertical) phase setting switches**
Three dip switches used to set the vertical phase of the added border. The switches are arranged vertically, with the most significant bit at the top (1-4-4 bits). Change the settings of these switches when changing the mode selection between 525 and 625 lines.

㉒ **BORDER H (horizontal) phase setting switches**
Three dip switches used to set the horizontal phase of the additional border. The switches are arranged vertically, with the most significant bit at the top (2-4-4 bits). Change the settings of these switches when changing between D1 and D2 modes.

㉓ PASS switch for self-diagnosis
Setting bits 1 to 3 of this switch to ON causes the K, C, and Y video signal circuits to be skipped, respectively. Keep the three bits set to OFF except when carrying out self-diagnostic testing.

㉔ DROP SHADOW V (vertical) LIMIT phase setting switches
Three switches used to set the vertical phase for the limiters to prevent overflows at the top and bottom ends of the drop shadow. Of these switches arranged vertically, the top one is for setting the highest-order bit of the phase data, the second one for setting the next four bits, and the bottom one for setting the low-order four bits. These switches are for use by Sony service personnel.

㉕ DROP SHADOW H (horizontal) LIMIT phase setting switches
Three dip switches used to set the horizontal phase for the limiters to prevent overflows at the top and bottom ends of the drop shadow. The switches are arranged vertically, with the most significant bit at the top (2-4-4 bits). These switches are for use by Sony service personnel.

Optional boards

The following table gives the names and types of optional boards available, and the slot numbers of the circuit board slots reserved for them.

Slot No.	Board Name	Supplied as
2	DSC-58 graphic data display board	BKDM-5060
5	ALU-13 non-linear effects board	BKDM-5030
6	ALU-12 non-linear effects board	BKDM-5030
16	DLP-12 D2 digital combiner board	BKDM-5020
	DLP-11 D1 digital combiner board	BKDM-5021
17	DIF-8 D2 & analog composite I/O board D2 I/O board	BKDM-5010 BKDM-5012
	DIF-9 D1 & analog component I/O board D1 I/O board	BKDM-5011 BKDM-5013
18	IF-293 D2 & analog composite I/O board D2 I/O board	BKDM-5010 BKDM-5012
	IF-294 D1 & analog component I/O board D1 I/O board	BKDM-5011 BKDM-5013

Note

For each of the slot numbers 16 to 18, select the optional board appropriate for the system. You can change between D1 and D2 modes by changing the optional boards installed in these slots. In some cases a change in the operation mode may require settings to be changed on other boards.

1-2-2. Connectors on the Rear Panel

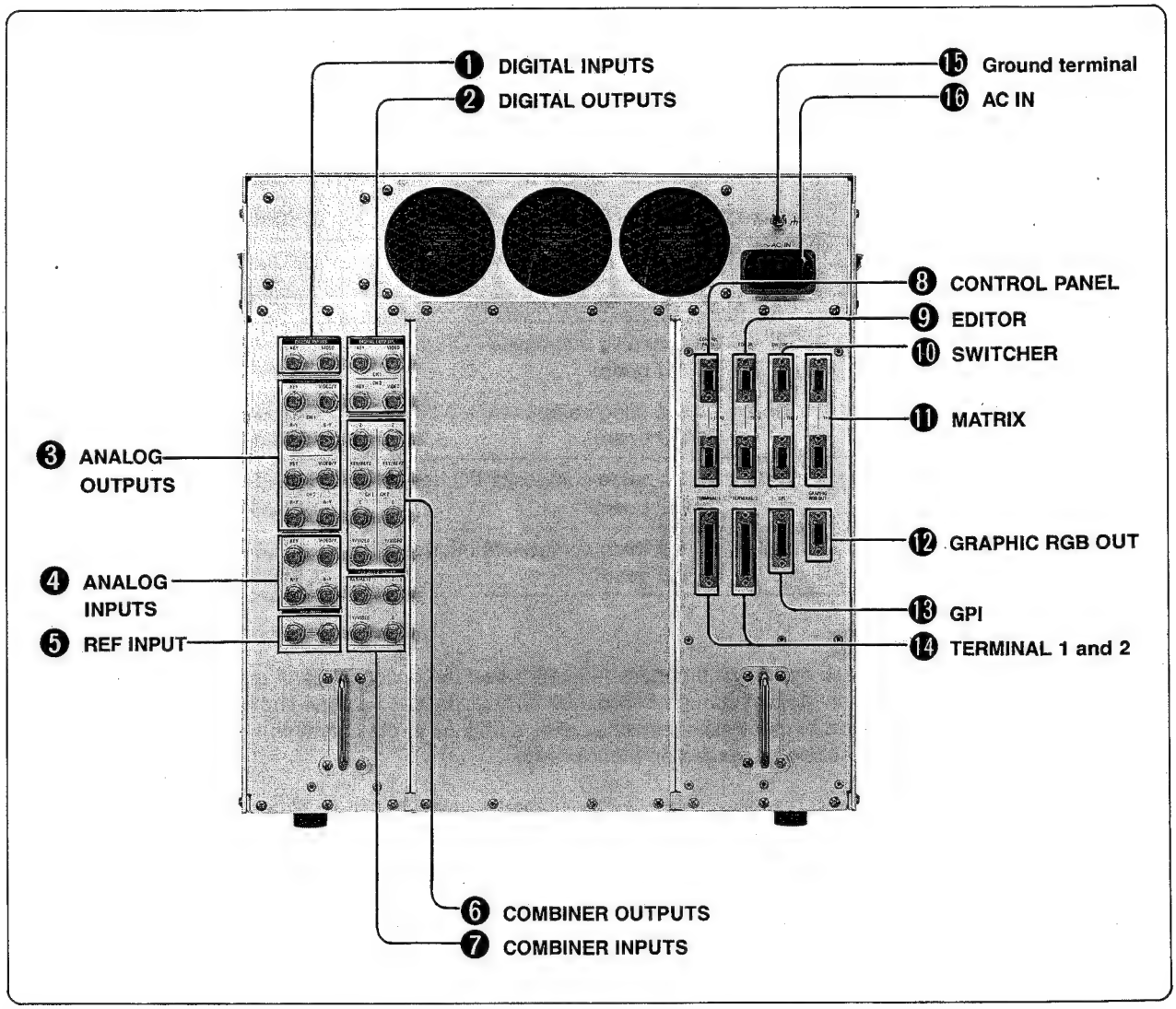

❶ **DIGITAL INPUTS (BNC)**
Input the serial digital video and key signals.When the phase difference between the input signals and the reference signal input from the REF INPUT connectors ❺ is in a range of −0.9H to +0.1H, the input signal phase is adjusted automatically.
Using these connectors requires the BKDM-5010/5011/5012/5013 option board.

❷ **DIGITAL OUTPUTS (BNC)**
Output the serial digital video and key signals. The connectors for channels 1 and 2 (CH1 and CH2) output the same signals.
Using these connectors requires the BKDM-5010/5011/5012/5013 option board.

❸ **ANALOG OUTPUTS (BNC)**
Output the analog video and key signals. The connectors for channels 1 and 2 (CH1 and CH2) output the same signals.
Using these connectors requires the BKDM-5010/5011 option board.

❹ **ANALOG INPUTS (BNC)**
Input the serial digital video and key signals.
Using these connectors requires the BKDM-5010/5011 option board.

❺ **REF INPUT (reference video input) (BNC)**
A pair of loop-through connectors used to input the analog reference video signal. The signal input to one of these connectors may be output from the other. When you use only one of them, be sure to terminate the other one with a 75-ohm terminator.

❻ **COMBINER OUTPUTS (BNC)**
Output the serial digital signals to combine the image produced by the unit and those produced by other DME-5000 units. In D1 (component) format, VIDEO and KEYZ are used. In D2 (composite) format, Y, C, KEY, and Z are used. The connectors for channels 1 and 2 (CH1 and CH2) output the same signals.
Using these connectors requires the BKDM-5020/5021 option board.

❼ **COMBINER INPUTS (BNC)**
Input the serial digital signals to combine the image produced by the unit and those produced by other DME-5000 units. The combined image is output from the COMBINER OUTPUTS connector ❻. In D1 (component) format, VIDEO and KEYZ are used. In D2 (composite) format, Y, C, KEY, and Z are used. The connectors for channels 1 and 2 (CH1 and CH2) output the same signals.
Using these connectors requires the BKDM-5020/5021 optional board.

❽ **CONTROL PANEL (D-SUB 9-pin)**
A pair of loop-through connectors for connection to the BKDS-8010 or BKDM-5070 optional control panel. You may control up to four DME-5000 units using their loop-through CONTROL PANEL connectors from the same external control panel. These connectors comply with the RS422-A standard.

❾ **EDITOR (D-SUB 9-pin)**
A pair of loop-through connectors for connection to external equipment such as the BVE-8000 editing control system, from which you can control the unit. You may daisy-chain two or more DME-5000 units using their loop-through EDITOR connectors to control them from the same external controller. These connectors comply with the RS422-A standard.

❿ **SWITCHER (D-SUB 9-pin)**
If you connect either one of these loop-through connectors to the DVS-8000 digital video switcher, you can control one of the four internal auxiliary buses (AUX 1 to 4) of the switcher from the DVS-8000.

⓫ **MATRIX (D-SUB 9-pin)**
If you connect either one of these loop-through connectors to an external matrix switcher, you can use the matrix switcher to switch the signal to be input to the unit.

⓬ **GRAPHIC RGB OUT (D-SUB 9-pin)**
Outputs the analog video signal (R, G, B, and SYNC) for input to a video monitor with R, G, and B input connectors.
Using this connector requires the BKDM-5060 option board.

⓭ **GPI (general purpose I/O) (D-SUB 15-pin)**
Used to input or output trigger signals (up to four each for input and output) from or to external equipment. You may set the conditions for inputting or outputting each trigger signal.

⓮ **TERMINAL 1 and 2 (D-SUB 25-pin)**
Connect these connectors to appropriate control terminals when required to initialize or inspect the unit.

⓯ **Ground terminal**
Use this terminal to ground the system.

⓰ **AC IN**
Connect this connector to an appropriate AC power supply using the power supply cord supplied.

1-3. System Connections

1-3-1. Connection with Dedicated Control Panel and I/O Equipment

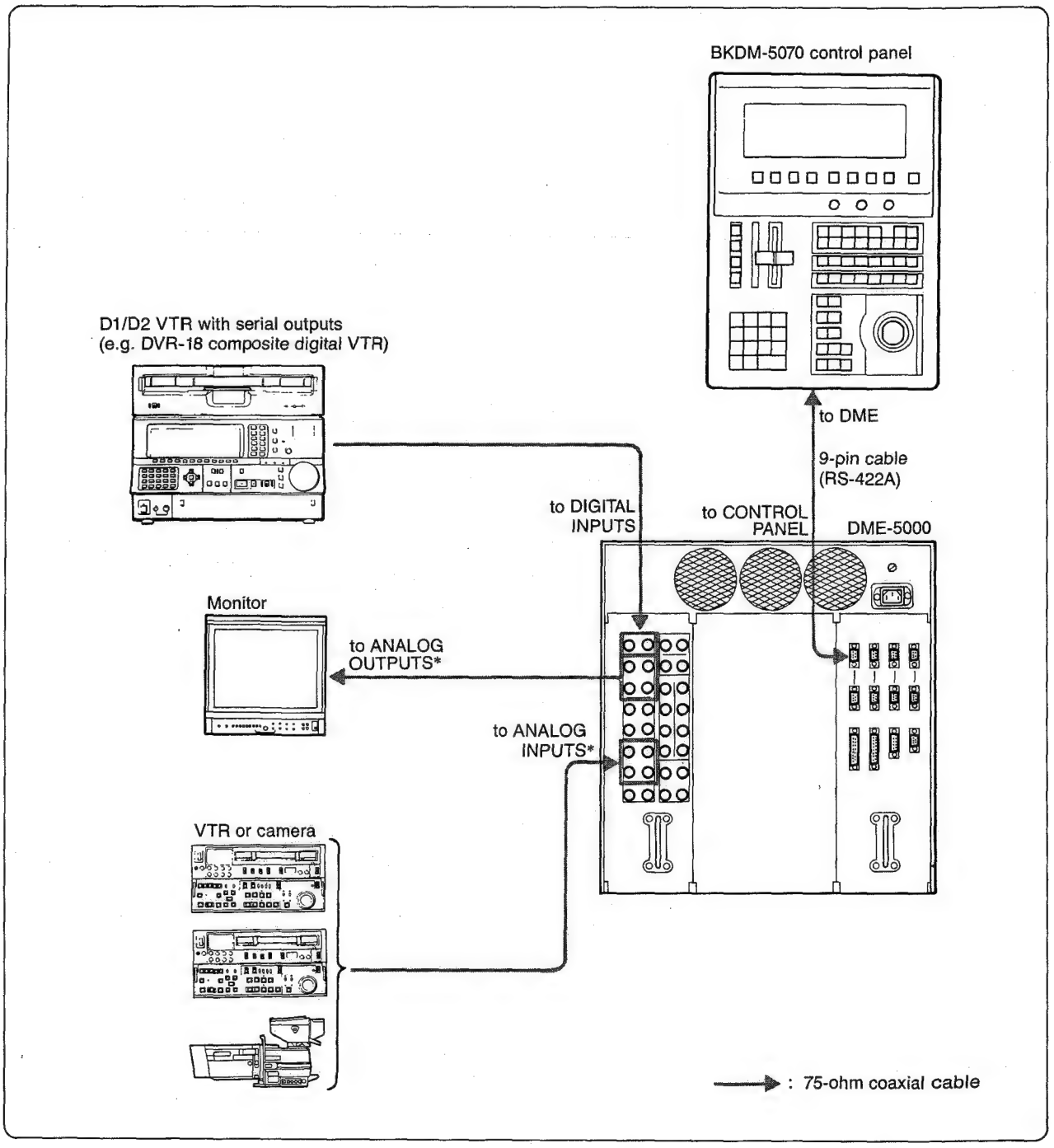

* Use Y, R-Y, B-Y, and KEY to input/output component signals, or VIDEO and KEY to input/output composite signals.

1-3-2. Connection with DVS-8000/8000C Digital Video Switcher

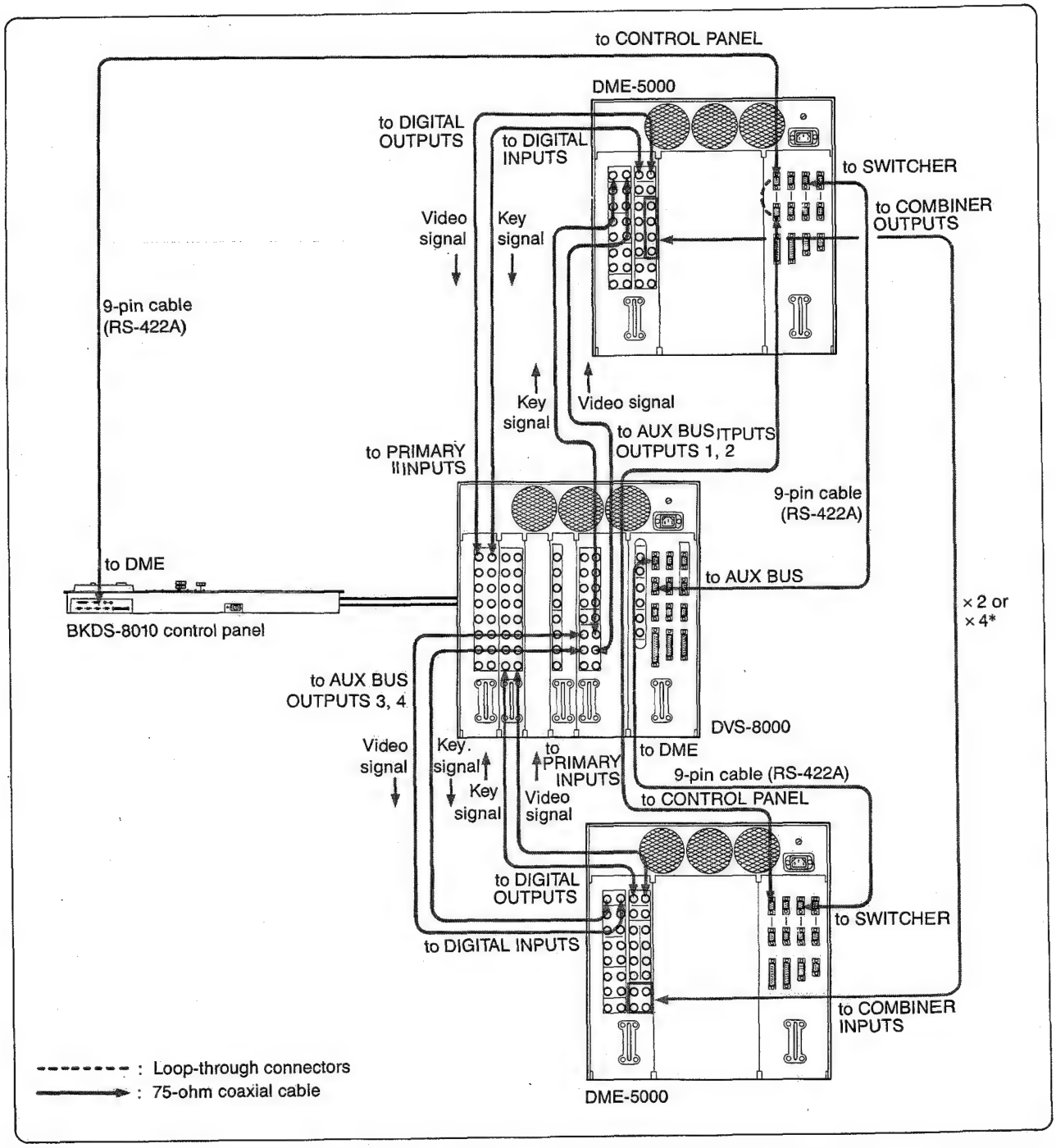

* For D1 mode: Connect COMBINER OUTPUTS (VIDEO and KEYZ) and COMBINER INPUTS (VIDEO and KEYZ) with 2 cables.
For D2 mode: Connect COMBINER OUTPUTS (Y, C, KEY, and Z) and COMBINER INPUTS (Y, C, KEY, and Z) with 4 cables.

1-3-3. Connection with DME-9000 Digital Multi Effects (for D1 mode)

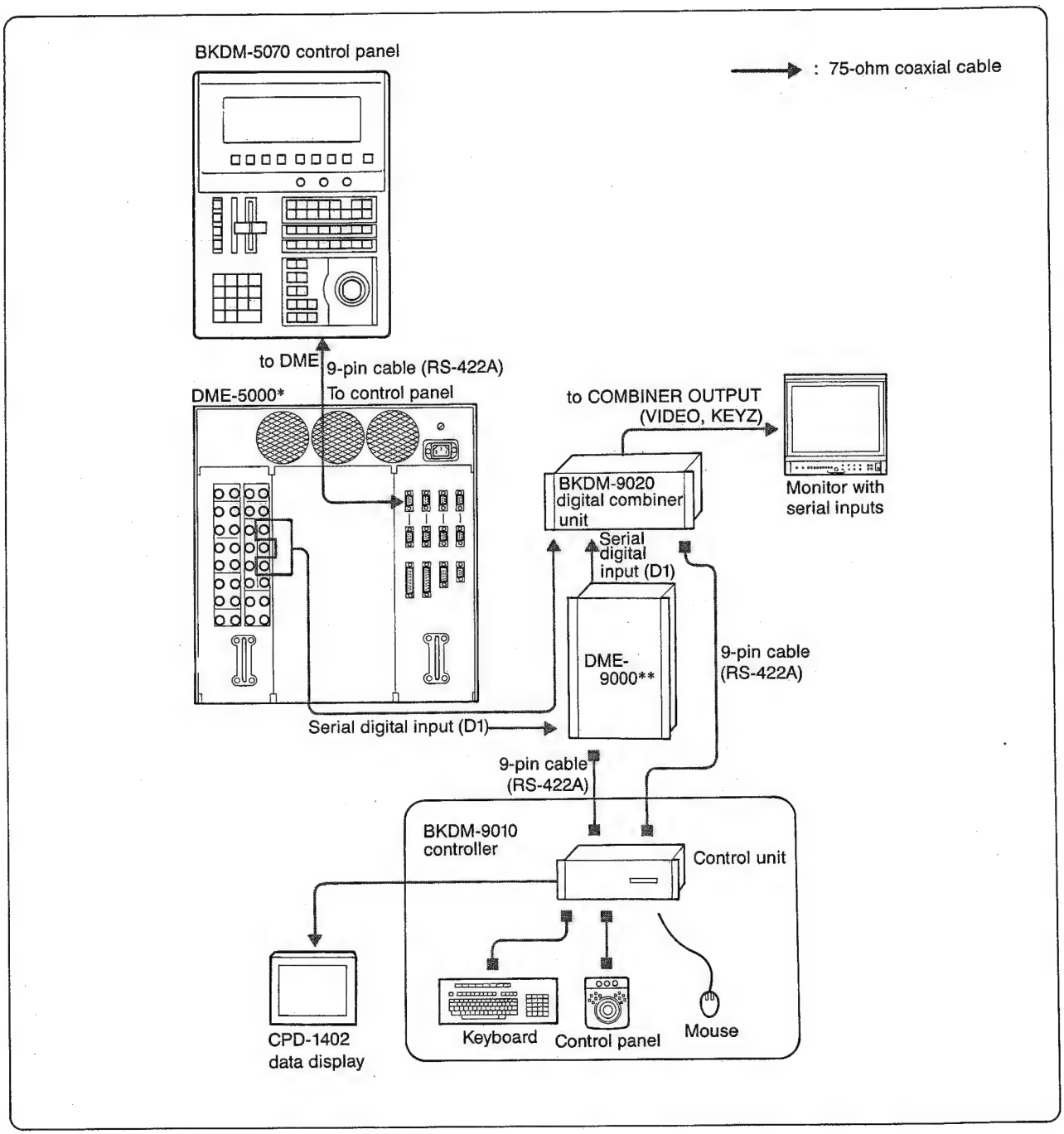

* The DME-5000 requires the BKDM-5021 option board.
** The DME-9000 requires the BKDM-9023 option board.

1-3-4. Connection with BVE-9000 Editing Control System

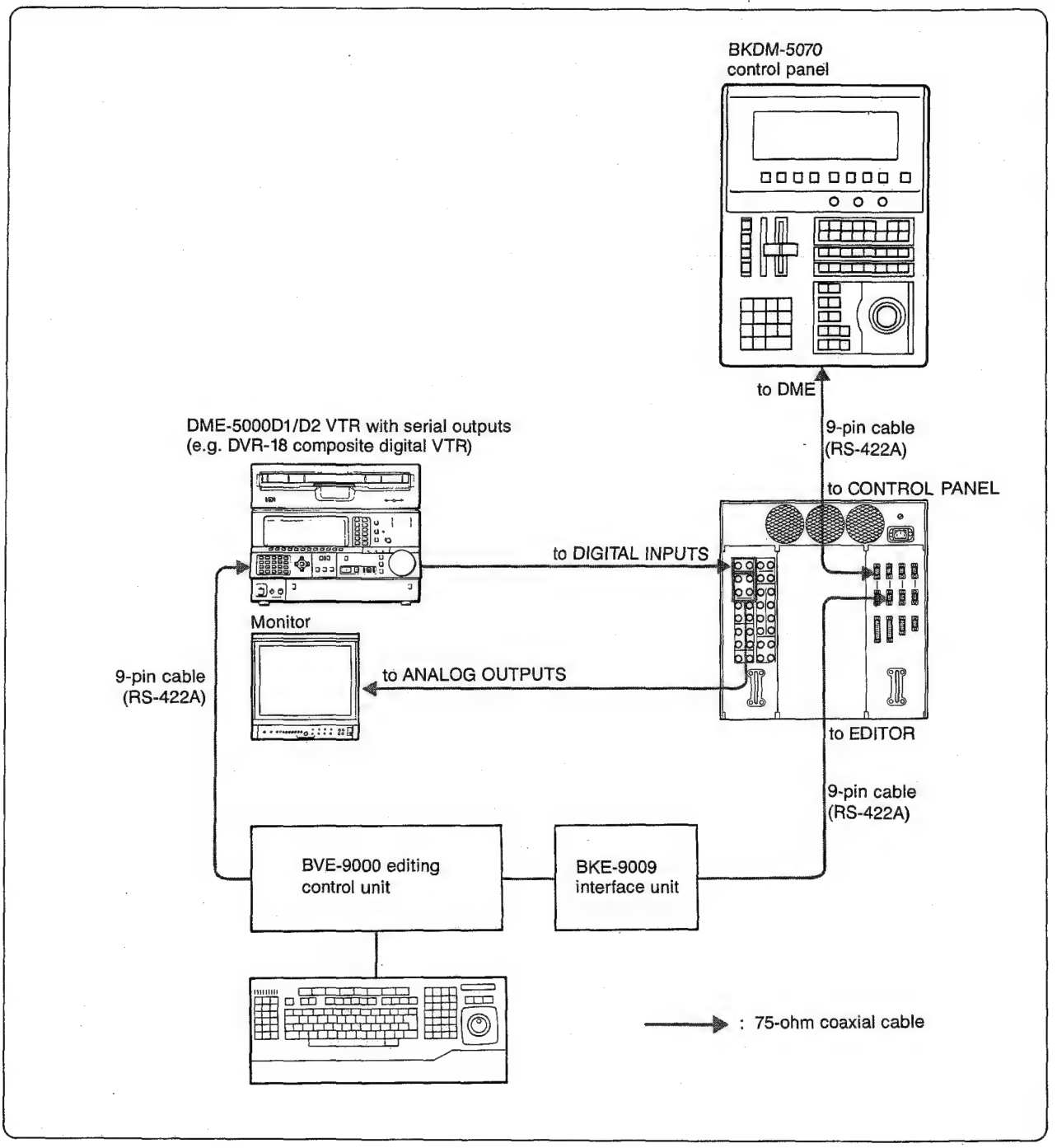

1-3-5. Connection with DVS-V1201 Digital Video Routing Switcher

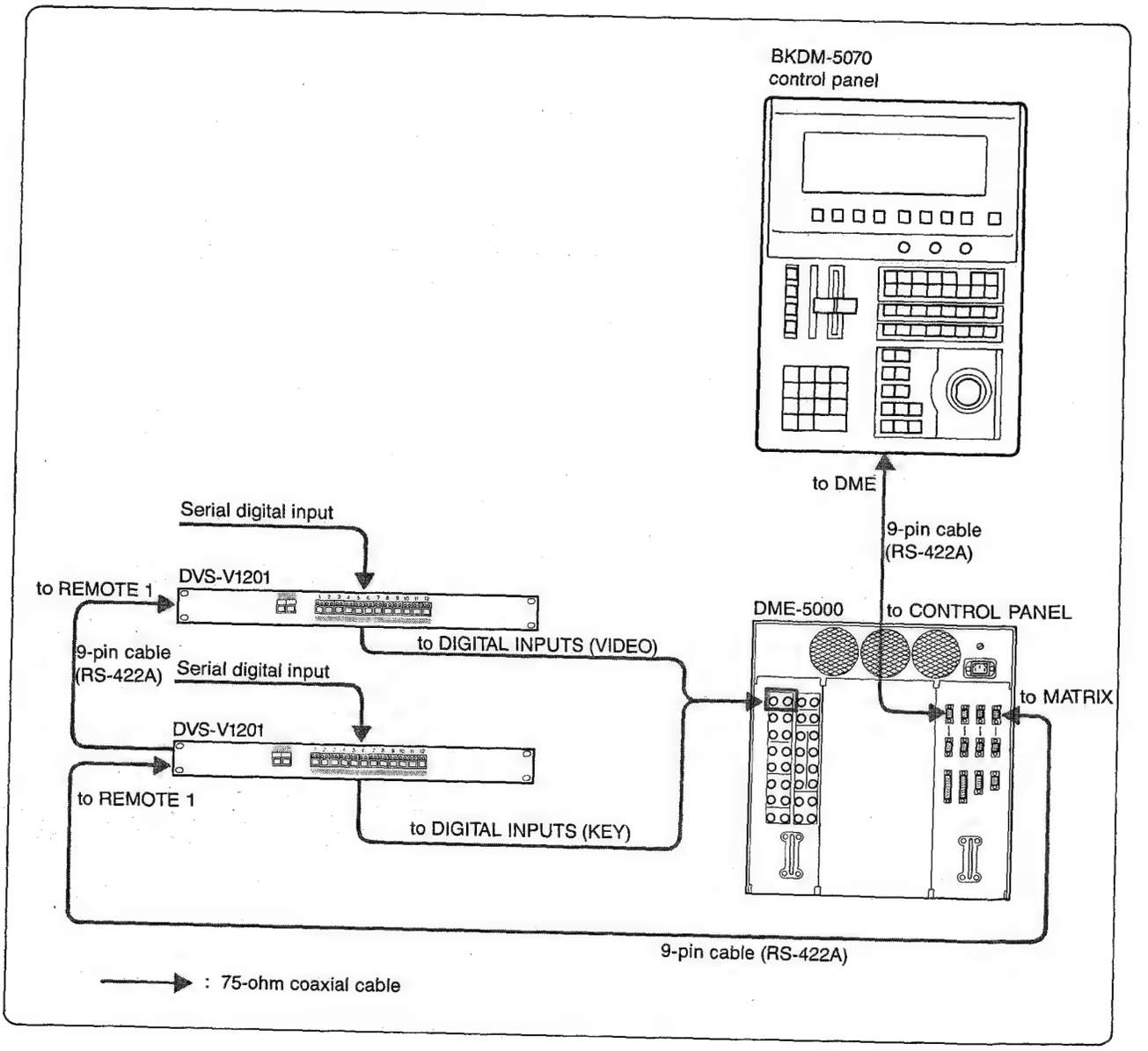

1-4. Specifications

General

Power requirements	85-132/170-265 V AC switched automatically
Power consumption	Approx. 500 W (with full options)
Temperature	
Storage	−20°C to +55°C (−4°F to +131°F)
Operating	5°C to 40°C (41°F to 104°F)
Operating within specifications	10°C to 35°C (50°F to 95°F)
Humidity	
Operating	80% RH or lower
Operating within specifications	70% RH or lower
Dimensions (w/h/d)	424 × 443 × 450 mm, excluding projections (16¾ × 17½ × 17¾ inches)
Weight	50 kg (110 lb 4 oz)

I/O connectors

DIGITAL INPUTS	Component
	VIDEO For serial digital input signal, BNC (× 1), 75 ohms
	KEY For serial digital input signal, BNC (× 1), 75 ohms
	Composite
	VIDEO For serial digital input signal, BNC (× 1), 75 ohms
	KEY For serial digital input signal, BNC (× 1), 75 ohms
DIGITAL OUTPUTS	Component
	VIDEO For serial digital output signal, BNC (× 2), 75 ohms
	KEY For serial digital output signal, BNC (× 2), 75 ohms
	Composite
	VIDEO For serial digital output signal, BNC (× 2), 75 ohms
	KEY For serial digital output signal, BNC (× 2), 75 ohms
ANALOG INPUTS	Component
	Y, R-Y, B-Y
	For analog component input signal, BNC (× 3)
	Y: 1 Vp-p with SYNC
	R-Y, B-Y: 0.7 Vp-p
	KEY VS: 1 Vp-p, BNC (× 1)
	Composite
	VIDEO For analog composite input signal, BNC (× 1)
	KEY VS: 1 Vp-p, BNC (× 1)
ANALOG OUTPUTS	Component
	Y, R-Y, B-Y
	For analog component output signal, BNC (× 6)
	Y: 1 Vp-p with SYNC
	R-Y, B-Y: 0.7 Vp-p
	KEY VS: 1 Vp-p, BNC (× 2)
	Composite
	VIDEO For analog composite output signal, BNC (× 2)
	KEY VS: 1 Vp-p, BNC (× 2)
REF INPUT	Component
	For analog reference input signal, BNC (× 2)
	B.B.: 0.3 Vp-p Hi-z loop-through
	Composite
	For analog reference video input signal
	B.B.: 0.7 Vp-p

COMBINER INPUTS	Component VIDEO, KEYZ For serial digital input signal, BNC (× 2) Composite Y, C, KEY, Z For serial digital input signal, BNC (× 4)
COMBINER OUTPUTS	Component VIDEO, KEYZ For serial digital output signal, BNC (× 4) Composite Y, C, KEY, Z For serial digital output signal, BNC (× 8)
GRAPHIC RGB OUT	For RGB and SYNC output signal, D-SUB 9-pin (× 1)

Remote control signals

CONTROL PANEL	Complying with RS-422A standard (D-SUB 9-pin)
EDITOR	Complying with RS-422A standard (D-SUB 9-pin)
SWITCHER	Complying with RS-422A standard (D-SUB 9-pin)
MATRIX	Complying with RS-422A standard (D-SUB 9-pin)
TERMINAL 1	Complying with RS-232C standard (D-SUB 25-pin)
TERMINAL 2	Complying with RS-232C standard (D-SUB 25-pin)
GPI	4 inputs and 4 outputs, programmable (D-SUB 15-pin)

Performance

Linearity	DG: 2% max. DP: 2° max. (RAMP signal superimposed with 40-IRE subcarrier)
Frequency response	±0.25 dB, 200 kHz to 4.2 MHz
Pulse characteristic	K: 1% max., 2T pulse
Signal-to-noise ratio	Over 52 dB

Sampling

Clock	D2 composite: 14.3 MHz D1 component: 13.5 MHz
Quantization	Analog: 9 bits Digital I/O: 10 bits (8 bits in memory)

Input phase difference absorption

Input error range allowable: −56 µs to +6 µs per frame

Acessories supplied

Rack mounting angles (1 set; fitted to the cabinet)
EX-270 extension board (1)
AC power cord (1)
Plug adapter for AC power cord (1)
75-ohm terminator (1)
Operation and maintenance manual (1)

Recommended equipment

BKDM-5070 control panel for DME-5000
DVS-8000/8000C digital video switcher
BKDS-8010 control panel for DVS-8000/8000C
BVE-9000 editing control system

Optional circuit boards

BKDM-5060 graphic data display board
BKDM-5021 D1 digital combiner board
BKDM-5020 D2 digital combiner board
BKDM-5013 D1 digital I/O board
BKDM-5012 D2 digital I/O board
BKDM-5011 D1 analog component I/O board
BKDM-5010 D2 analog composite I/O board
BKDM-5030 nonlinear effects board

Design and specifications are subject to change without notice.

(1)

SECTION 2
INSTALLATION

2-1. UNPACKING AND REPACKING

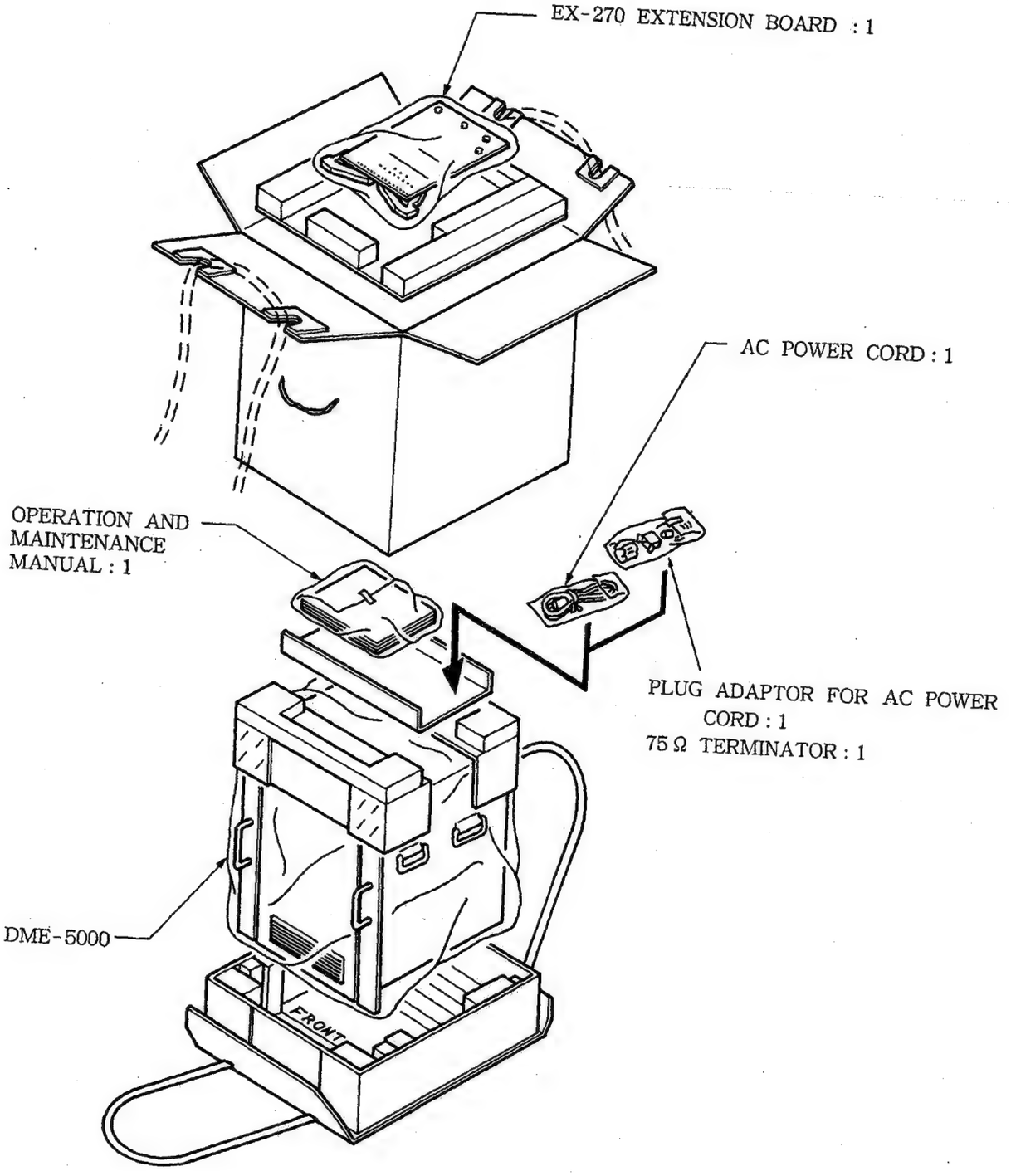

2-2. OPERATING ENVIRONMENT

- Take special care regarding the air circulation of the installation site to prevent the inside temperature of the unit from rising. Make sure not to block the ventilation holes on the unit.
- The operating ambient temperature of the unit is 5℃ to 40℃. Do not install the unit near a heat source.

2-3. EXTERNAL DIMENSIONS

- The external dimensions of the unit are given below.

2-4. POWER VOLTAGE

- The DME-5000 power uses a switching regulator and is designed for use with 100V to 115V. Therefore, you can use the unit in the 100V to 115V range without changing the power voltage.

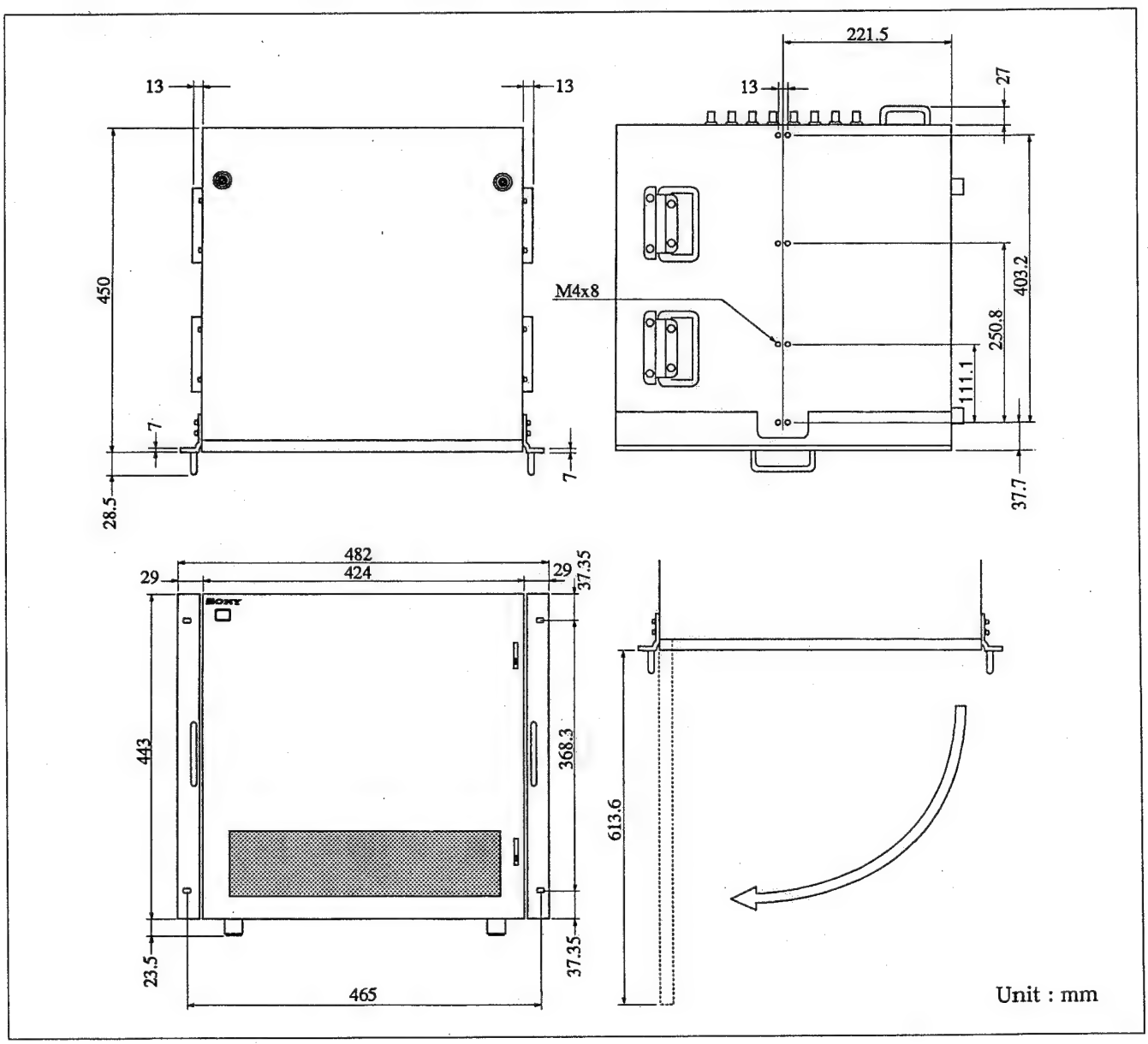

2-5. CONFIRMATION AND ADJUSTMENT AT INSTALLATION TIME

2-5-1. Setting the Power Voltage

After installing the unit, check the power voltage inside the unit.

(1) Open the front panel. Check whether the power unit is properly inserted and fixed with 4 screws shown the arrows of front side (+ PWH4x8).

(2) Turn ON the power and see whether the operation indicator LEDs (D1 to D8) on the edge of the CPU-82 board flash sequentially.

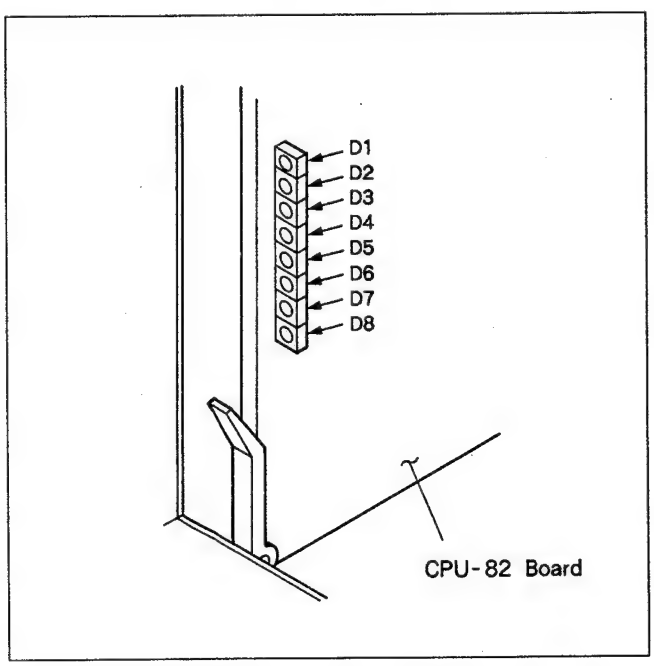

* If none of the lamps light, there is no power voltage (+5V) output. If none of the lamps light and the fan is rotating, the +5V supply is defective. If none of the lamps light and the fan does not rotate, the primary side of the power unit is defective. If the lamps light and the LEDs stop flashing, this could mean a CPU-82 board error or voltage error in the +5V and ±12V supplies. Check and adjust the voltage using the procedure given below.

① See Section "3-5. How to Use the Extension Board" to connect the IF-293 board (slot No. 18) and the extension board.
② Measure the +5V at TP-1 (GND) and TP-2 (+5V) on the extension board and make sure you get +5V ± 0.05V.
③ Measure TP-3 (+12V), TP-6 (GND), and TP-9 (-12V) on the extension board and make sure you get +12V ± 0.1V and -12V ± 0.1V respectively.
④ Measure the -5V at TP-1 (GND) and TP-12 (-5V) on the extension board and make sure you get -5V ± 0.05V.

⑤ If the measured values differ from the specified values, adjust the voltage using the procedure given below. Adjust the digital voltmeter while connecting it to the TPs mentioned above.

1. Remove the adjustment window cover of the power unit.
2. Insert an adjustment driver through the adjustment window and turn the voltage adjustment volume of the corresponding switching regulator. Observing the digital voltmeter reading, adjust the voltage until you obtain the proper voltage.

Note : Set the power voltage with all the card boards inserted in their locations (excluding the option boards).

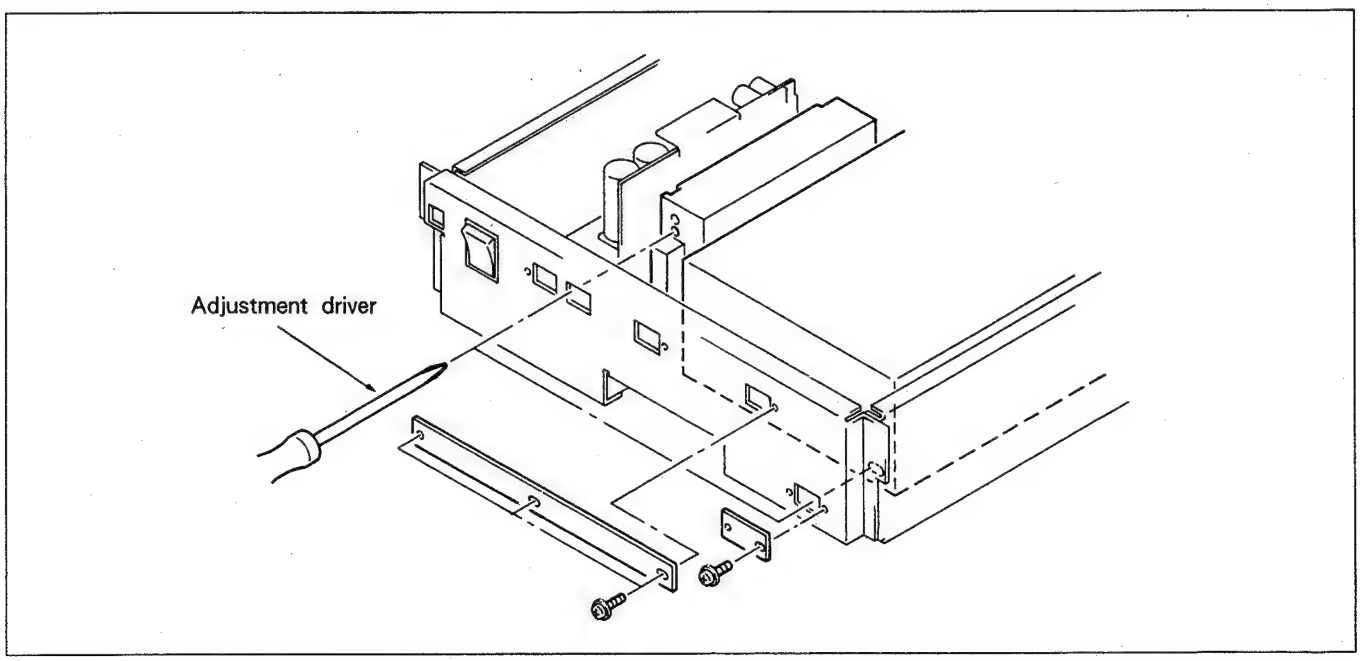

2-5-2. How to Install the Card Boards

Each printed circuit board must be installed in a designated slot of the DME-5000. Check whether each printed circuit board is installed in the proper slot as indicated in the table below.

Slot No.	Board Name	Slot No.	Board Name
1	CPU-82	14	DPR-15
2	DSC-58 (BKDM-5060)	15	DPR-16
3	Option Board	16	DLP-12 (BKDM-5020)
4	Option Board		※DLP-11 (BKDM-5021)
5	ALU-13 (BKDM-5030)	17	DIF-8 (BKDM-5010 or -5012)
6	ALU-12 (BKDM-5030)		※DIF-9 (BKDM-5011 or -5013)
7	ALU-11		
8	DPR-18	18	IF-293 (BKDM-5010 or -5012)
9	DPR-17		※IF-294 (BKDM-5011 or -5013)
10or12	MEM-41 (YorK)		
11	MEM-41(C)		
13	DLP-9, 10		

※ : Used by D1 mode.

- The name of the printed circuit board and the slot number in which the board can be installed are indicated on both sides A and B of the upper portion of the board toward you. (See the illustration below.)
- The DME-5000 can accommodate various systems and expand its functions by installation of option boards. Install each option board in the designated range and sequence in accordance with the slot number indicated on the upper portion of the board toward you, in the same way as the main printed circuit boards.

Note 1) Check whether the connectors of each printed circuit board are properly connected to the MB-305 board of the main body.

Note 2) If the printed circuit boards are installed in a wrong sequence, system error will occur and the unit will not operate properly.

Note 3) When you add an option board or when you adjust a printed circuit board, make sure to check the power voltage.

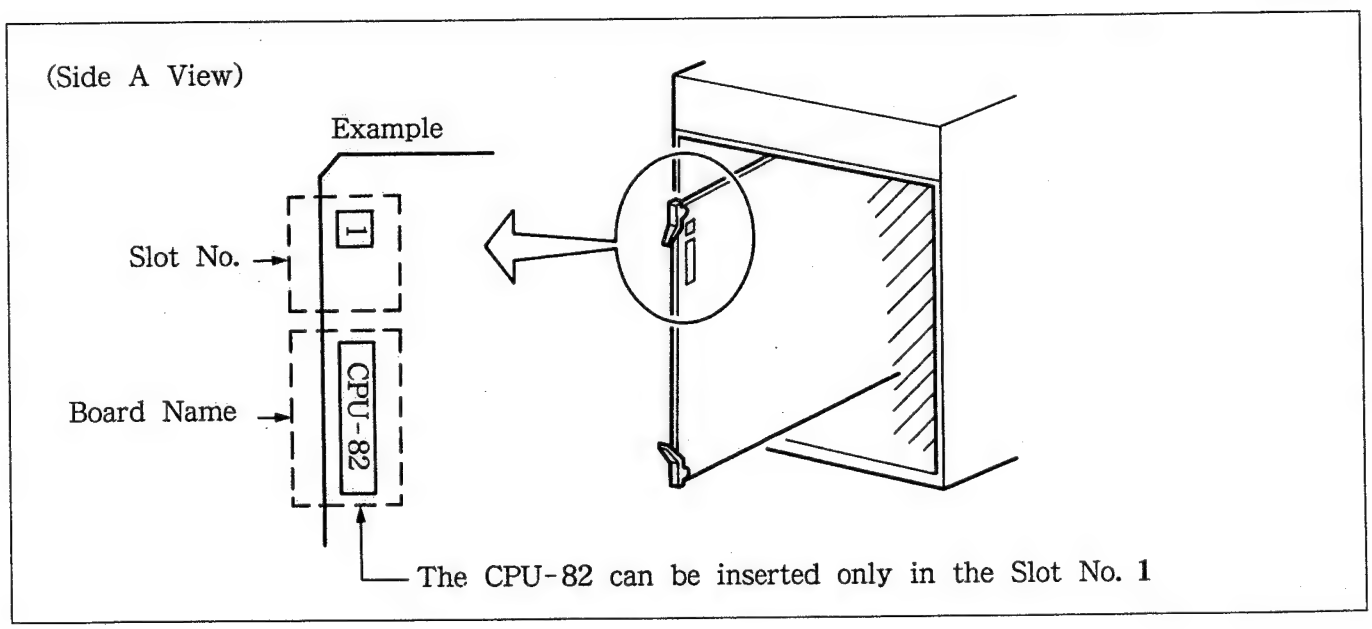

2-6. CONNECTORS

When you connect a cable to the connector on the rear panel during installation or maintenance service, use the hardware listed below or equivalent.

Panel Display	Connecting Connectors /Part No.
DIGITAL INPUTS	BNC Connector 1-560-009-11
DIGITAL OUTPUTS	
ANALOG INPUTS	
ANALOG OUTPUTS	
COMBINER INPUTS	
COMBINER OUTPUTS	
REF INPUT	
TERMINAL 1	D-SUB 25P 1-556-356-11
TERMINAL 2	
GPI	D-SUB 15P 1-566-355-11
CONSOLE	D-SUB 9P 1-566-354-11
EDITOR	
AUX1	
AUX2	
GRAPHIC RGB OUT	

2-7. INPUT/OUTPUT SIGNALS OF CONNECTOR

- DIGITAL INPUTS
  BNC connector, 75 Ω terminal
- ANALOG INPUTS
  BNC connector, 75 Ω terminal
- COMBINER INPUTS
  BNC connector
- REF INPUTS
  BNC connector, 75 Ω terminal
- DIGITAL OUTPUTS
  BNC connector, 75 Ω terminal
- ANALOG OUTPUTS
  BNC connector, 75 Ω terminal
- COMBINER OUTPUTS
  BNC connector

- CONTROL PANEL (RS-422)

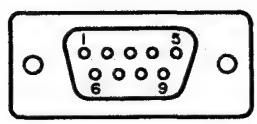

(FEMALE)

– EXIT VIEW –

Pin No.	Signal	Function
1	FG	Frame ground
2	TXA –	Transmit data (–) to control panel
3	RXB +	Receive data (+) from control panel
4	GND	Ground
5	NC	Not used
6	GND	Ground
7	TXB +	Transmit data (+) to control panel
8	RXA –	Receive data (–) from control panel
9	FG	Frame ground

• EDITOR (RS-422)

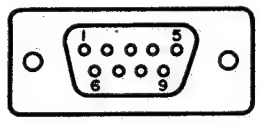

(FEMALE)

– EXIT VIEW –

Pin No.	Signal	Function
1	FG	Frame ground
2	TXA –	Transmit data (–) to editor
3	RXB +	Receive data (+) from editor
4	GND	Ground
5	NC	Not used
6	GND	Ground
7	TXB +	Transmit data (+) to editor
8	RXA –	Receive data (–) from editor
9	FG	Frame ground

• SWITCHER (RS-422)

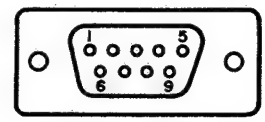

(FEMALE)

– EXIT VIEW –

Pin No.	Signal	Function
1	FG	Frame ground
2	TXA –	Transmit data (–) to switcher
3	RXB +	Receive data (+) from switcher
4	GND	Ground
5	NC	Not used
6	GND	Ground
7	TXB +	Transmit data (+) to switcher
8	RXA –	Receive data (–) from switcher
9	FG	Frame ground

• MATRIX (RS-422)

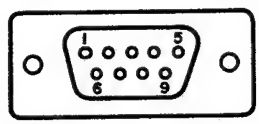

(FEMALE)

– EXIT VIEW –

Pin No.	Signal	Function
1	FG	Frame ground
2	TXA –	Transmit data (–) to matrix switcher
3	RXB +	Receive data (+) from matrix switcher
4	GND	Ground
5	NC	Not used
6	GND	Ground
7	TXB +	Transmit data (+) to matrix switcher
8	RXA –	Receive data (–) from matrix switcher
9	FG	Frame ground

• TERMINAL 1 (RS-232C)

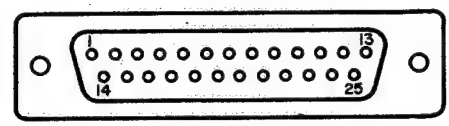

– EXIT VIEW – (FEMALE)

Pin No.	Signal	Function
1	FG	Frame ground
2	TXD	Transmit data to terminal
3	RXD	Receive data from terminal
4~6	NC	Not used
7	GND	Ground
8~25	NC	Not used

• TERMINAL 2 (RS-232C)

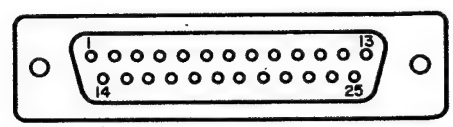

– EXIT VIEW – (FEMALE)

Pin No.	Signal	Function
1	FG	Frame ground
2	TXD	Transmit data to terminal
3	RXD	Receive data from terminal
4~6	NC	Not used
7	GND	Ground
8~25	NC	Not used

• GPI (RS-422)

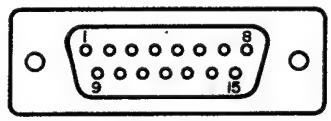

(FEMALE)

– EXIT VIEW –

Pin No.	Signal	Pin No.	Signal
1	FG	9	GPIO1G
2	GPIO1	10	GPIO2G
3	GPIO2	11	GPIO3G
4	GPIO3	12	GPIO4G
5	GPIO4	13	GPIIG
6	GPII1	14	GPII2
7	GPII3	15	GPII4
8	GPIIQ		

• GRAPHIC RGB OUT

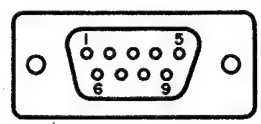

(FEMALE)

– EXIT VIEW –

Pin No.	Signal	Pin No.	Signal
1	FG	6	SYNC
2	GND	7	R
3	GND	8	G
4	GND	9	B
5	GND		

2-8. RACK MOUNTING

The DME-5000 can be used by mounting it on a 19-inch standard rack. When you use the rack, make sure to use the optional RMM-18DV rack mount rail.

< Items to be procured for mounting >

- RMM-18DV rack mount rail
- Screws for attaching the plate nut (+B4x8) 8 pieces
- Rack mount screws (+RK5x16) 4 pieces
- Rack mount decoration washers 4 pieces
  (Sony part number 2-297-913-01)

< Precautions on installation >

(1) When you install the DME-5000 and related units in the 19-inch standard rack, it is recommended that you install a ventilation fan to prevent the temperature in the rack from rising. Make sure that all the units in the rack operate in the temperature range of 5℃ to 40℃.

(2) When you install the unit in the rack, make sure to use the specified rail. The unit cannot be secured to the rack by the rack angles alone and such an installation is hazardous.

(3) It is recommended to fix the rack to a solid floor with bolts. It is hazardous if the rack falls on you when you remove the unit from the rack.

(4) The package of RMM-18DV rack mount rail contains a supplied installation manual. That manual, however, contains instructions for installing the DVR series VTRs on the rack. Since the procedure for mounting the DME-5000 differs partly from the procedure for mounting the VTR, use the procedure given in this manual instead.

< Installation method >

(1) While pressing the stopper of the RMM-18DV rack mount rail, pull out the inner member.

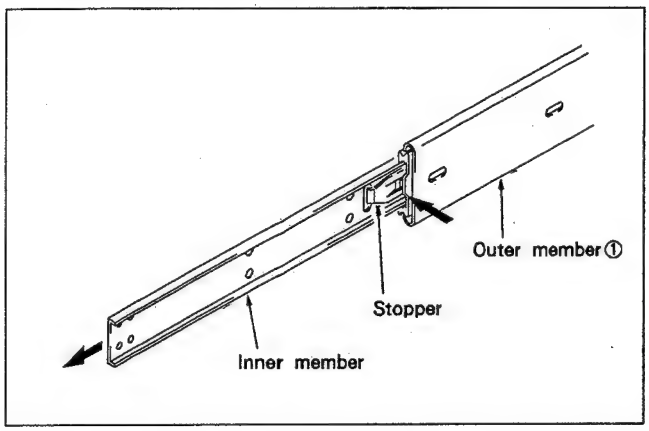

(2) Use the 16 screws (+B4x8) supplied with the RMM-18DV to attach the inner member to the unit. Remove the 2 screws (+PWH4x8) on the top panel. Remove the legs of the unit as required.

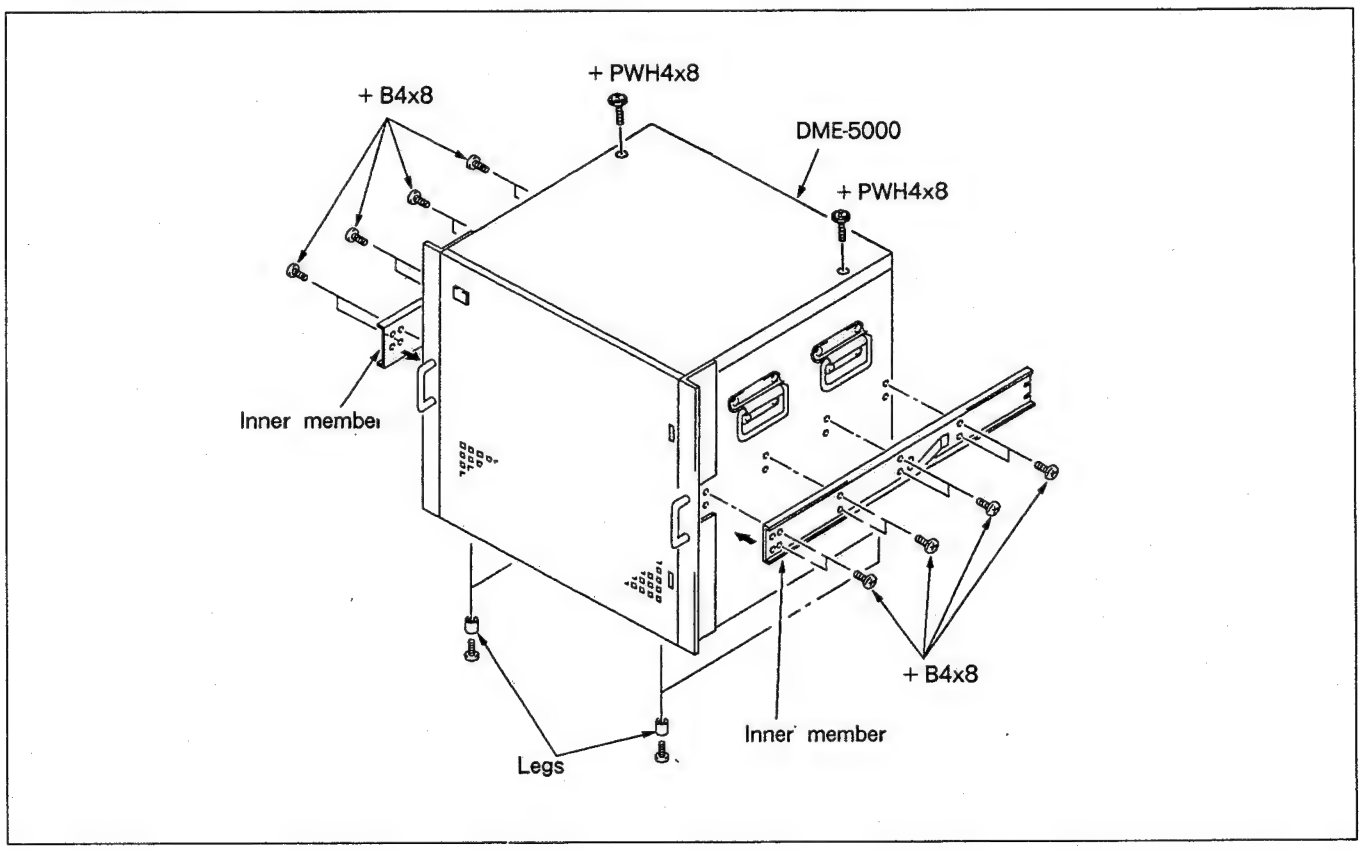

(3) Use the 8 screws (+ B4x8) procured for mounting to fix the bracket lightly to the outer member ①. At this time, move the outer member ② forward and backward so the screw hole of outer member ① can be seen.

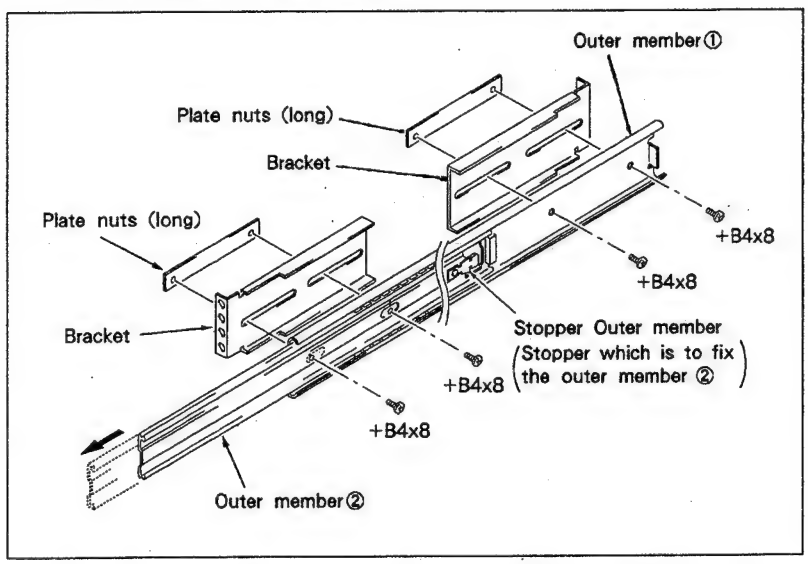

(4) Use the 4 screws (C4x12) and washers (W4) supplied with the RMM-18DV to fix the outer member assembly lightly to the rack. At this time, adjust the installing position of the outer member. After adjustment, tighten the screws (+ B4x8) that were lightly fixed in step (3).

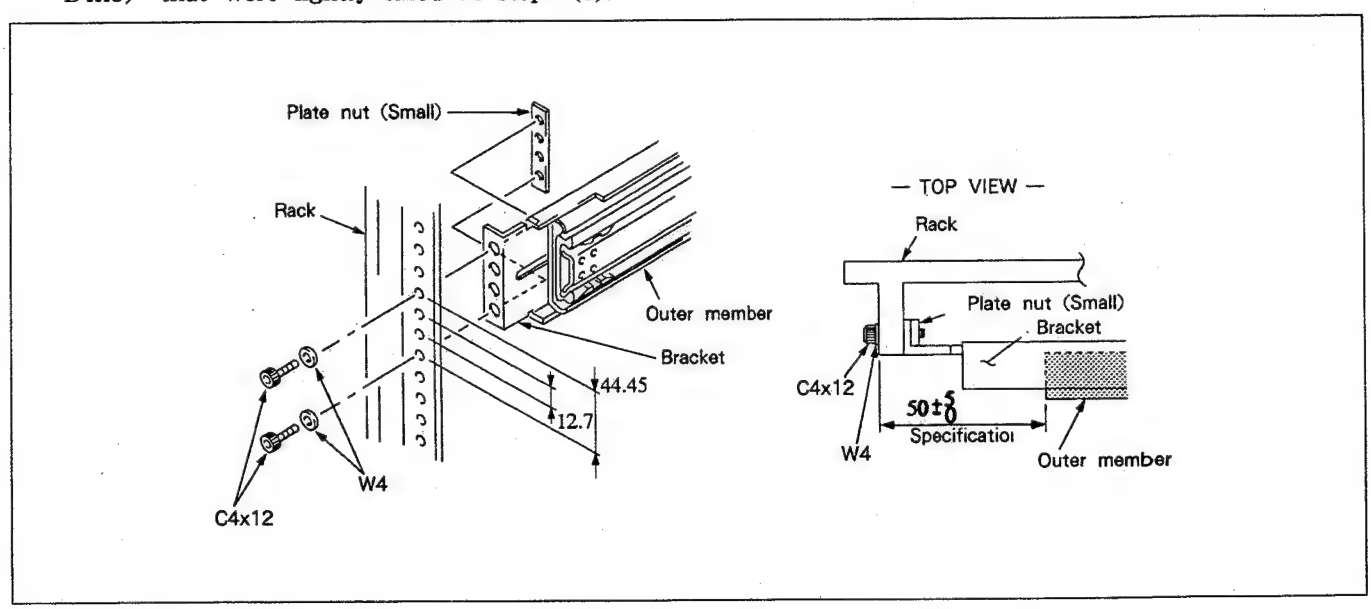

(5) Before you place the unit in the rack, release the stopper of the inner member. After making sure the unit can be smoothly placed in the rack, tighten the screws (C4x12) that were lightly fixed in step (4).

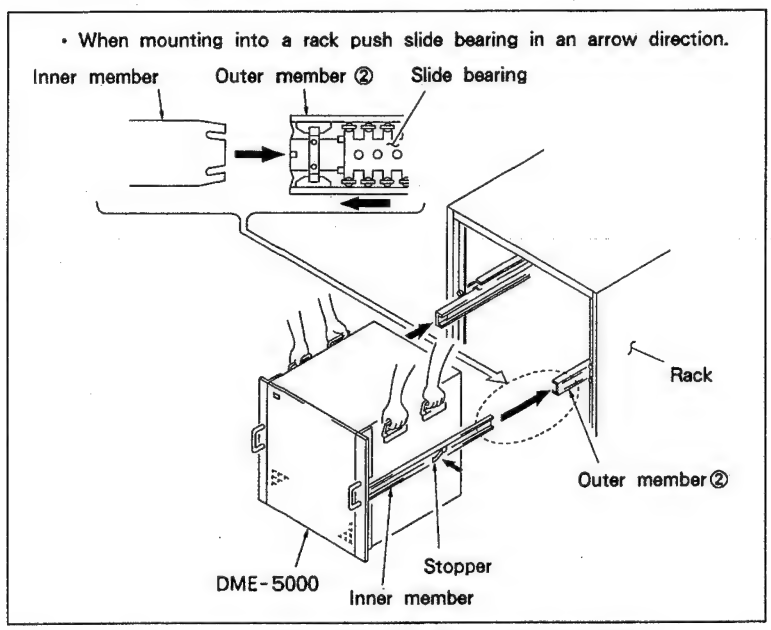

(6) After you placed the unit in the rack, use the 4 screws (+ RK5x16) and four decoration washers procured for mounting to fix the unit to the rack.

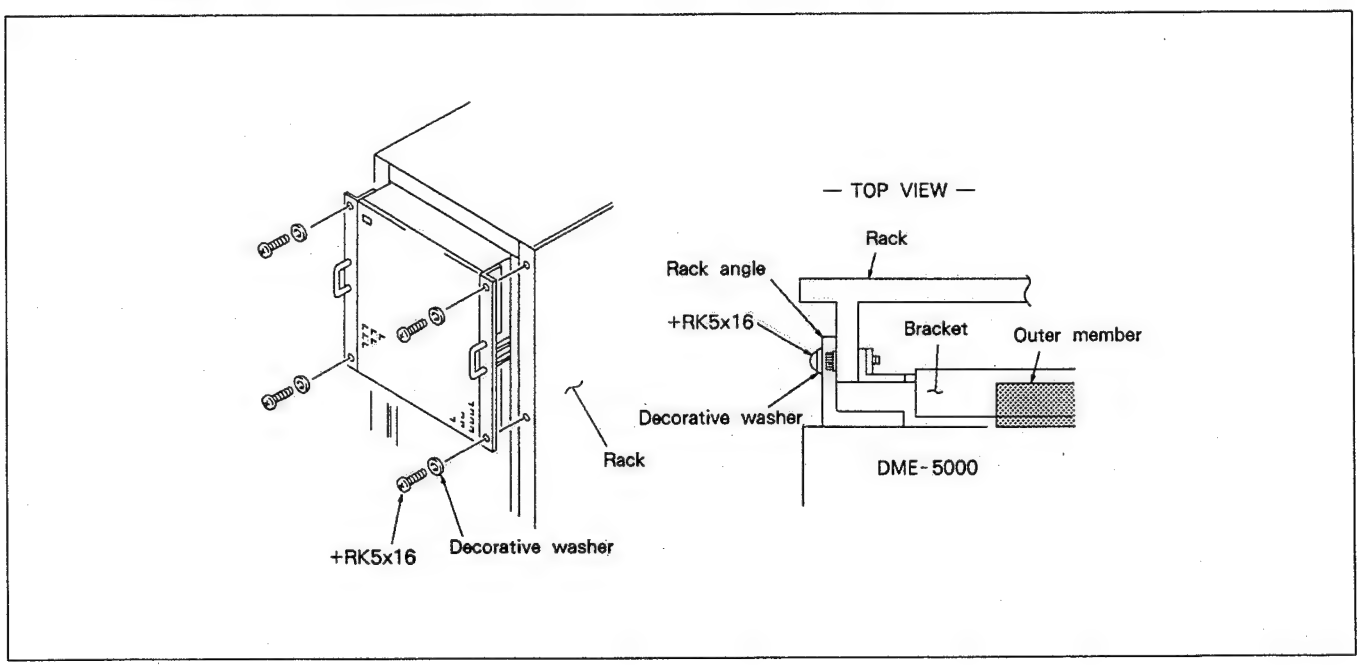

• The maximum distance when the DME-5000 is mounted in the rack is indicated below.

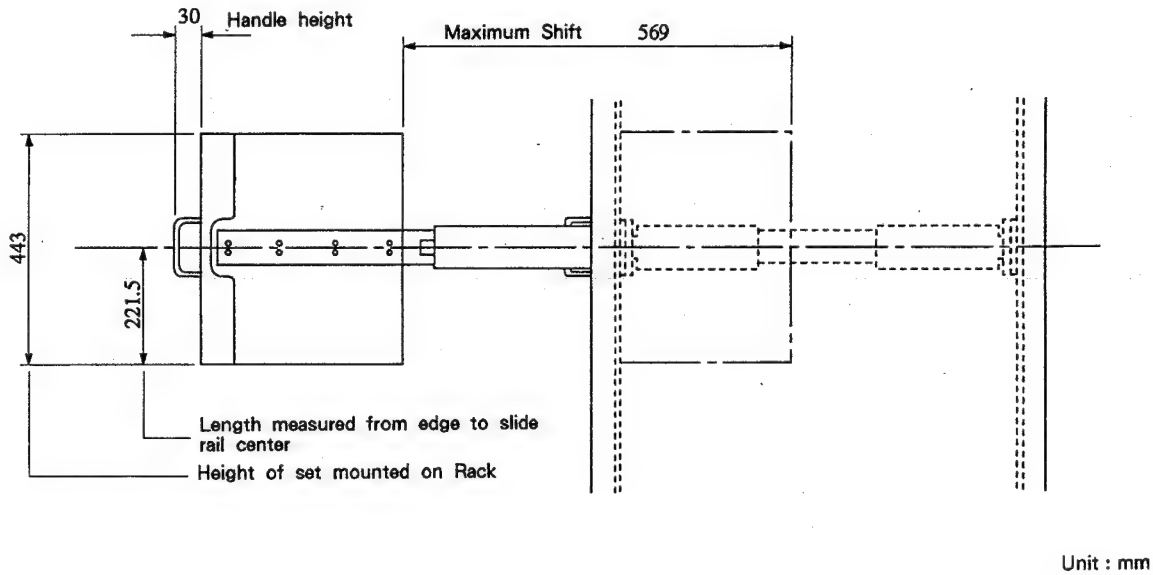

2-9. SUPPLIED ACCESSORIES

- EX-270 Extension Board (1)
- Power Cord (1)
- Power Coard Adapter (1)
- 75 Ω Terminator (1)
- Operation and Maintenance Manual (1)

2-10. OPTIONAL ACCESSORIES

- BKDM-5010 : Composite Input/Output Board
- BKDM-5011 : Component Input/Output Board (to be available soon)
- BKDM-5012 : Digital Composite IN/OUT Board
- BKDM-5013 : Digital Input/Output Board (to be available soon)
- BKDM-5020 : Digital Combiner Board (to be available soon)
- BKDM-5021 : Digital Combiner Board (to be available soon)
- BKDM-5030 : Non-linear Effects Board (to be available soon)
- BKDM-5060 : Graphic Data Display Board (to be available soon)

SECTION 3
SERVICE INFORMATION

3-1. REMOVAL OF PANELS

(1) Remove 4 screws of "a" (+PWH4x8), and remove the upper panel by pulling it out in your direction.

(2) Release the lock of "b" and open the front panel.

(3) Lift the hinge pin and to the upper groove as shown in inset figures ① to ③ to remove the front panel.

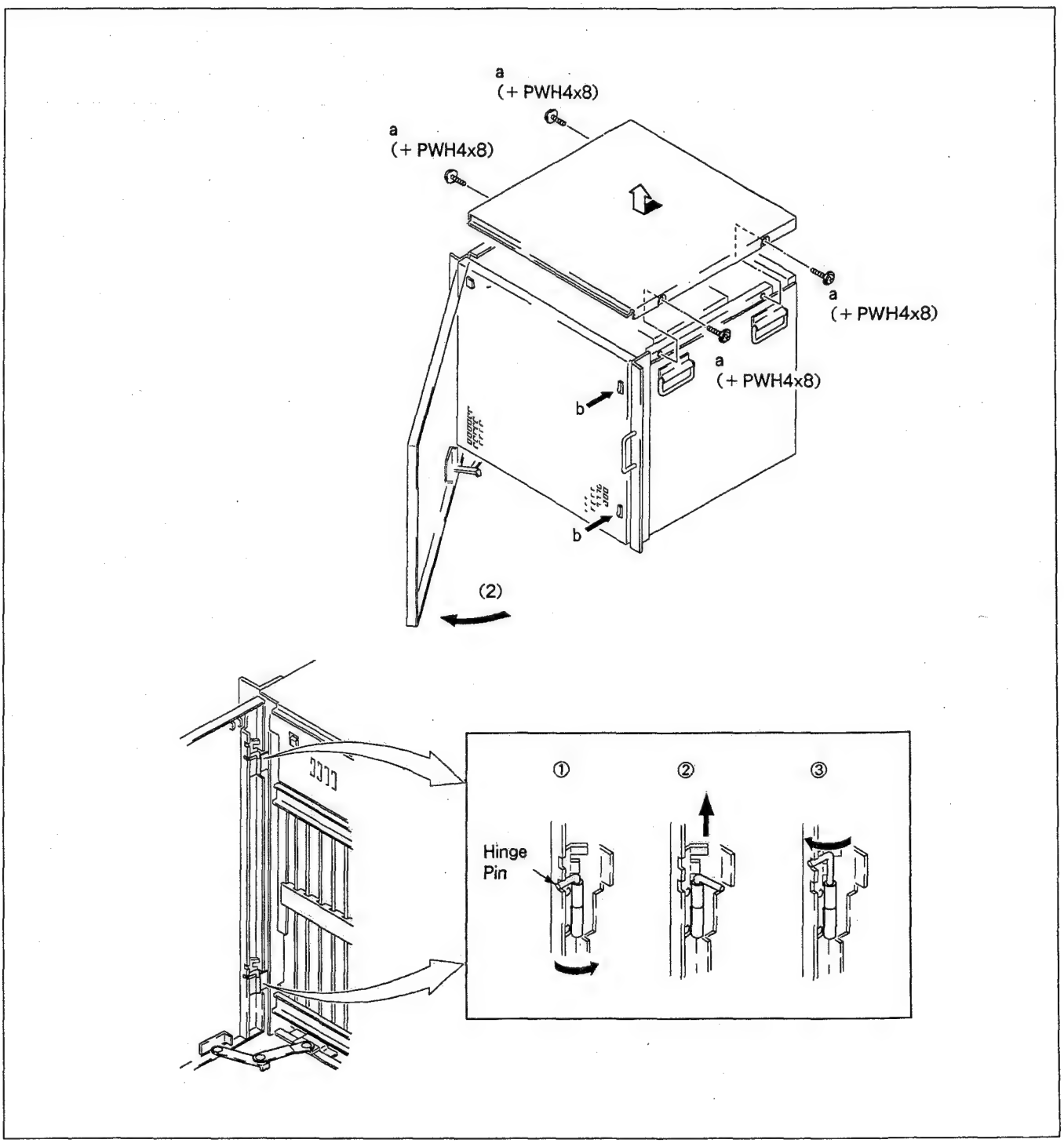

3-2. LOCATION OF PRINTED CIRCUIT BOARDS

〈POWER UNIT : TOP VIEW〉

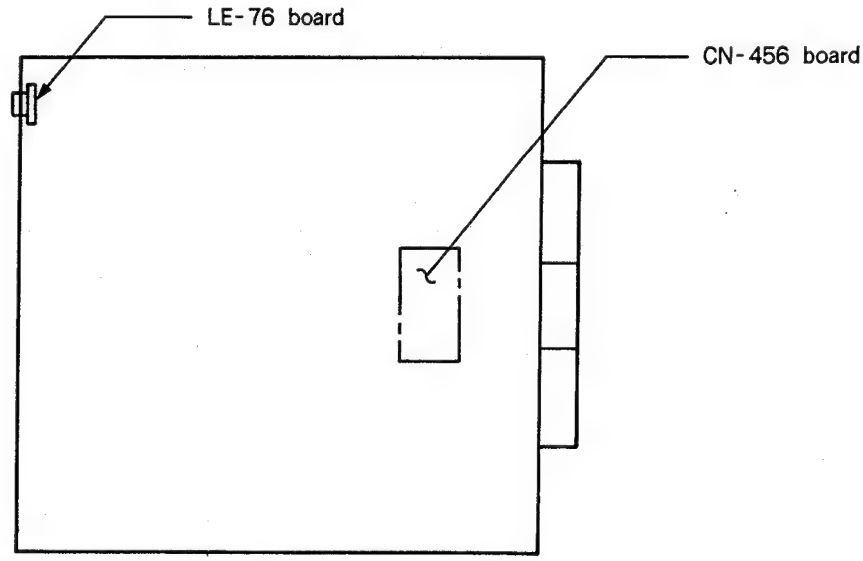

〈MAIN UNIT CHASSIS : TOP VIEW〉

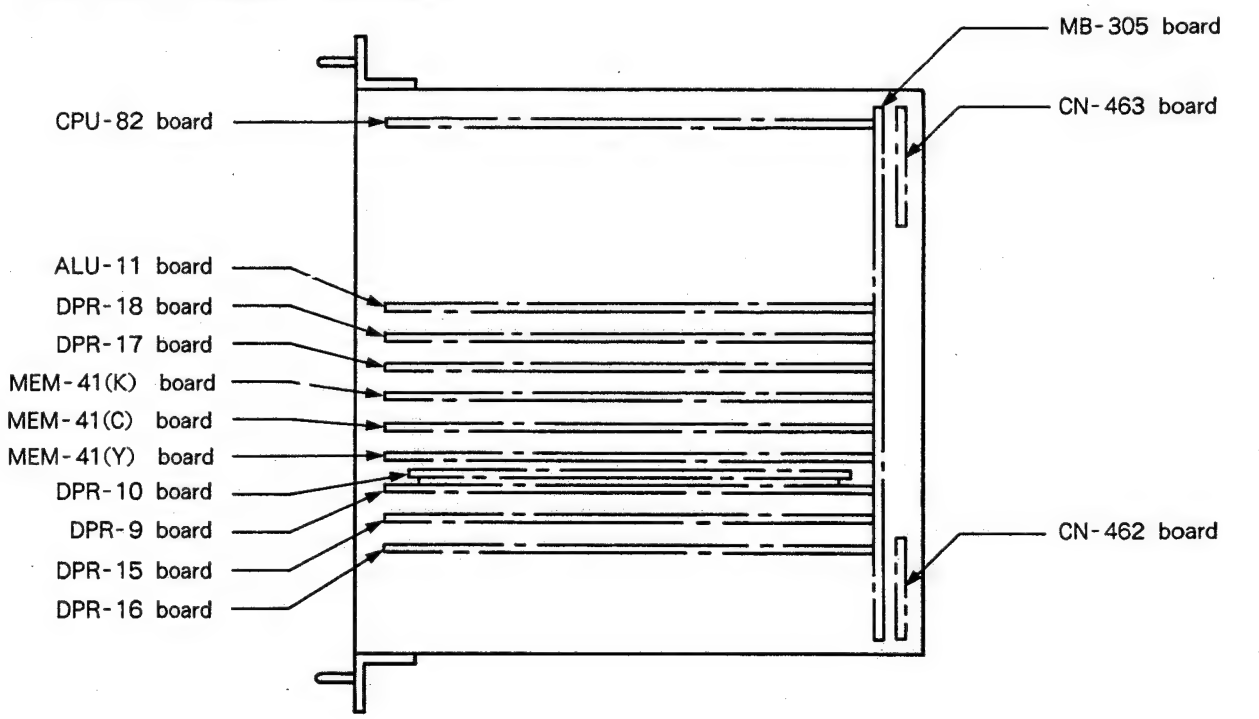

3-3. CIRCUIT INFORMATION

Board	Function
ALU – 11	Real-time Numeric Data Processor
CN – 456	Power Supply Connector Board
CN – 462	BNC Connector Board
CN – 463	D SUB Connector Board
CPU – 82	System Control and Communications
DLP – 9	Horizontal and Vertical Low Pass Filter
DLP – 10	IIR Vertical Low Pass Filter
DPR – 15	Input Pixel Effect Generator and Motion Detect
DPR – 16	Output Recursive Effect Generator and Border Generator
DPR – 17	Memory Address Selector and Write Address Generator
DPR – 18	Read Address Generator and Split Mirror Generator
LE – 76	Power LED Board
MB – 305	Mother Board
MEM – 41	3 Field Video Memory and Interpolator

3-4. HOW TO INSTALL AND REMOVE THE BOARDS

(1) Remove 12 screws of "a" (+PWH4x8), board stopper, and board holder.

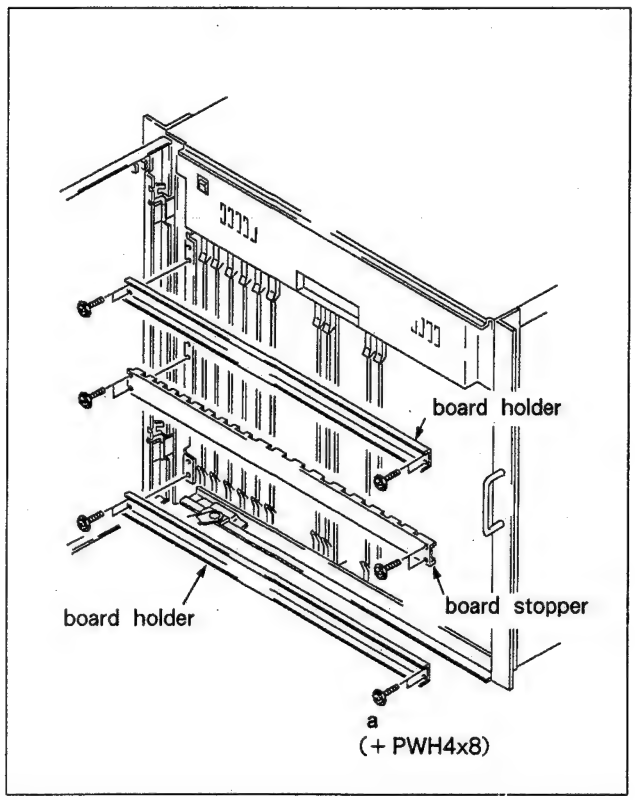

(2) Insert the board in the slot along the board guide rail. To install the board, press the board lever in the direction of arrow ② while pushing the board inside.

(3) To remove the board, pull the board lever in the direction of arrow ① and pull out the board in your direction.

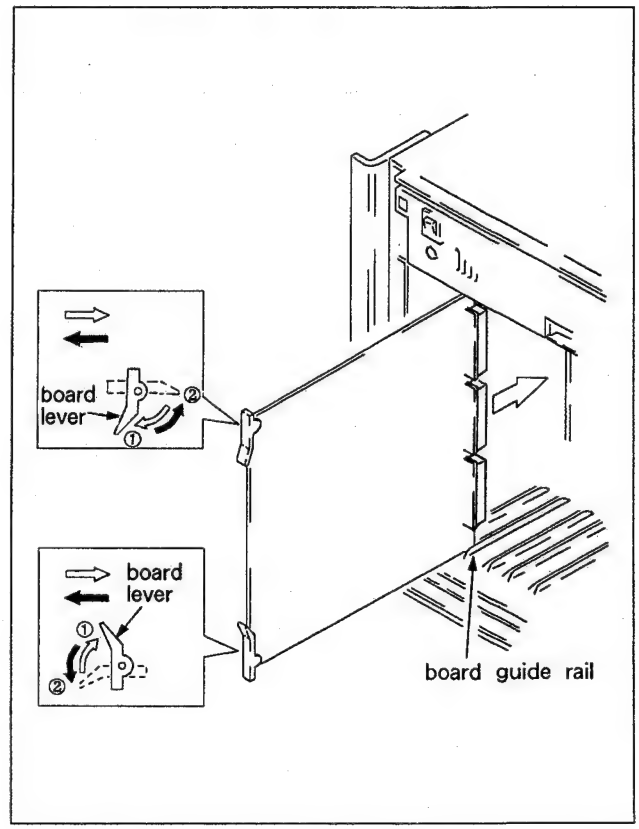

Note) After installing the board, check whether the connector is firmly connected to the MB-305 board.

3-5. HOW TO USE THE EXTENSION BOARD

• EX-270 EXTENSION BOARD

(1) Pull out the board to be adjusted in the manner described in section 3-4. How to Install and Remove the Boards.

(2) Insert the extension board into the slot and press the board lever to secure the board.

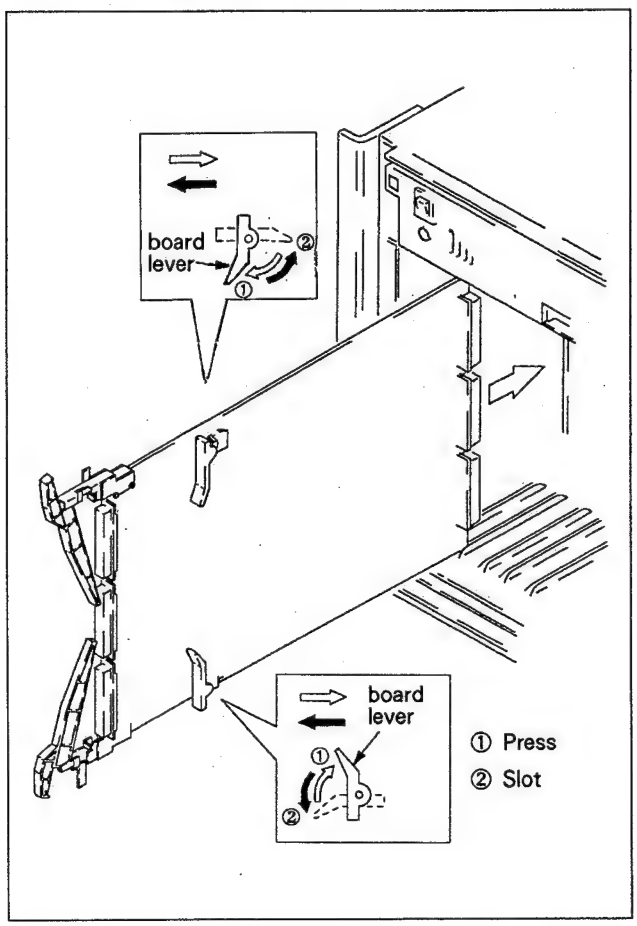

(3) Open the rail of the extension board. (Open the rail completely until it locks.) Insert the board to be adjusted along the rail of the extension board and make the adjustment.

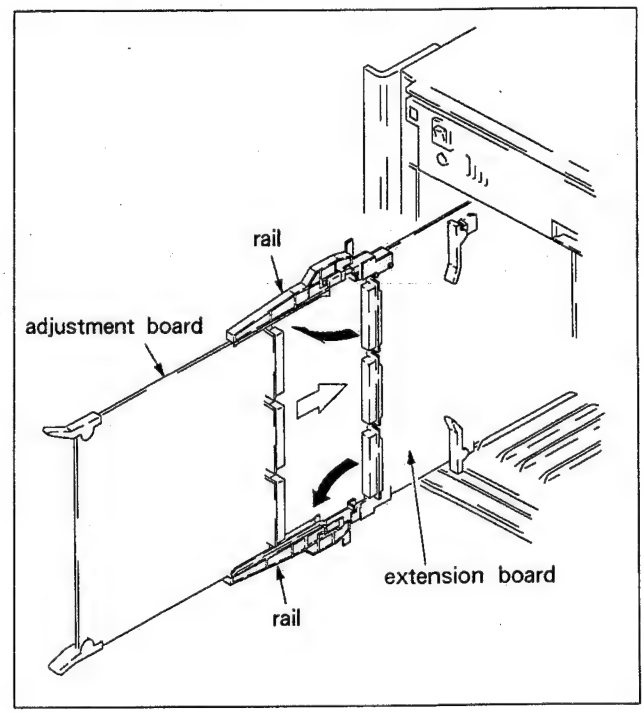

(4) After adjustment, press the eject lever in the direction of arrow and pull out the adjustment board in your direction.

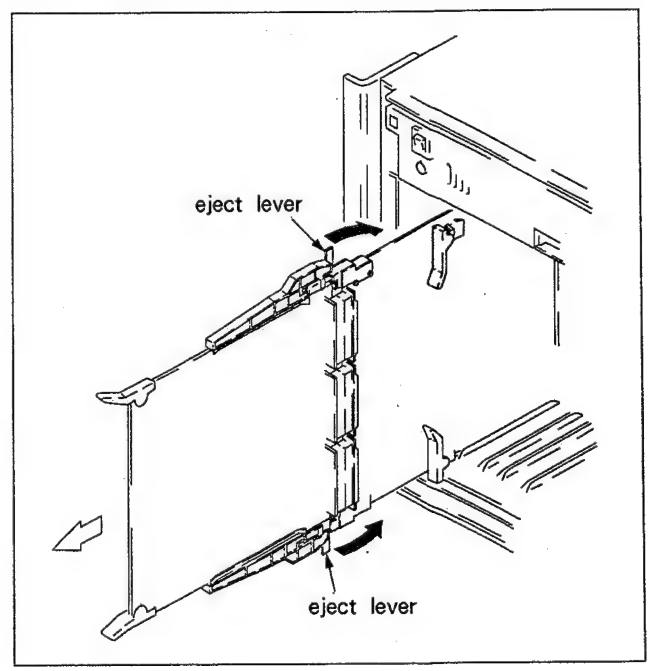

(5) Push the board lever in the direction of arrow and remove the extension board by pulling it in your direction.

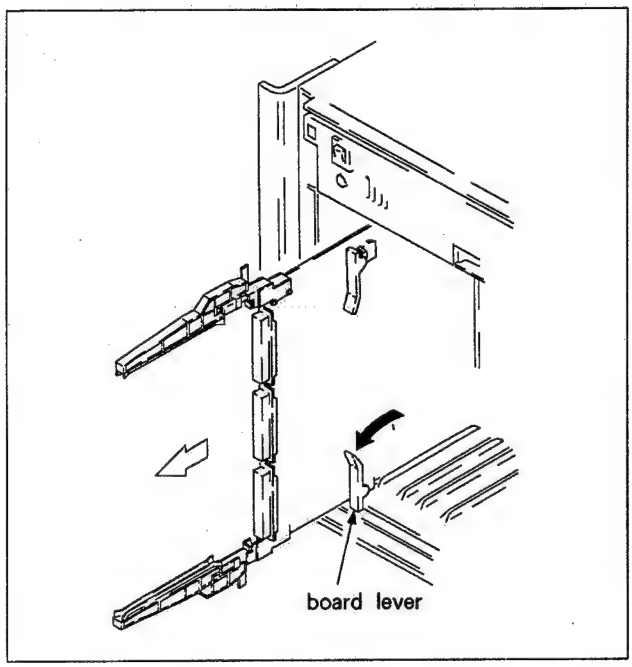

3-6. SERVICE PARTS

(1) Safety Related on Components Warning

Components with ⚠ on the schematic diagrams, exploded views and electrical spare parts list are to maintain safe operation. Replace these components with Sony parts specified in this manual or in service manual supplemtns published by Sony.

(2) Standardization of Parts

Replacement Parts supplied from Sony Parts Center may sometimes have different shape and outside view from the parts which are actually in use. This is due to "standardization of genuine parts". This manual's exploded view and electrical spare parts list are indicating the part numbers of "the standardized genuine parts at present".

(3) Stocked of Parts

The parts marked with "s" in the SP column of the exploded views and electrical spare parts lists are normally stocked for customer's inquiry. However, orders for parts, marked with "o" may not be ready which require additional delivery time when ordered.

SECTION 4
REPLACEMENT OF MAIN PARTS

4-1. LOCATION OF THE MAIN PARTS

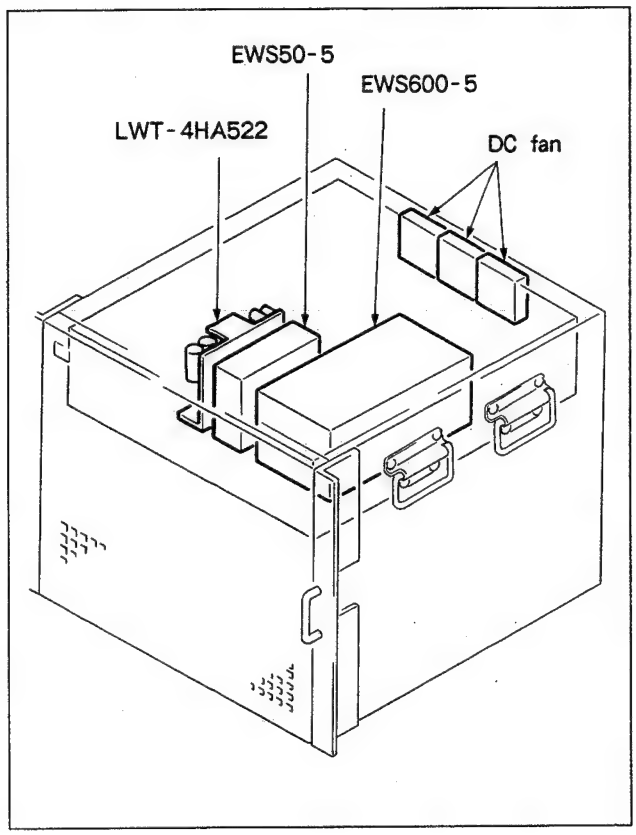

4-2. REPLACEMENT OF THE SWITCHING REGULATORS

(1) Remove the front panel in the manner described in section 3-1.

(2) Remove 4 screws (+PWH4x8) and pull out the power unit in your direction.

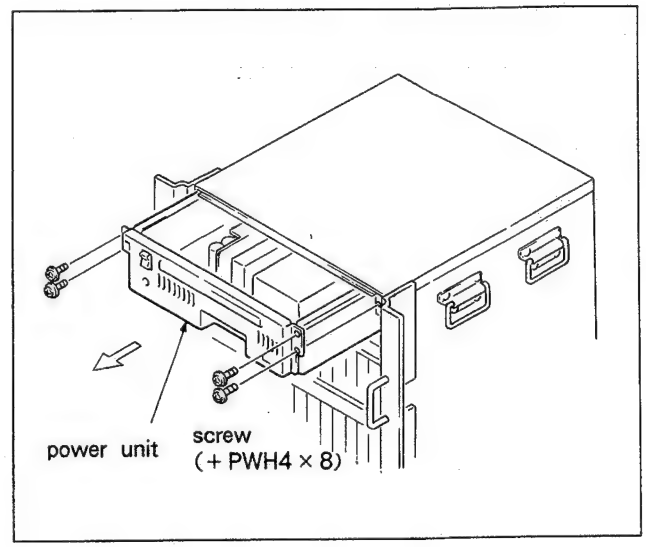

(3) Remove the harness from 11 wire clamps.

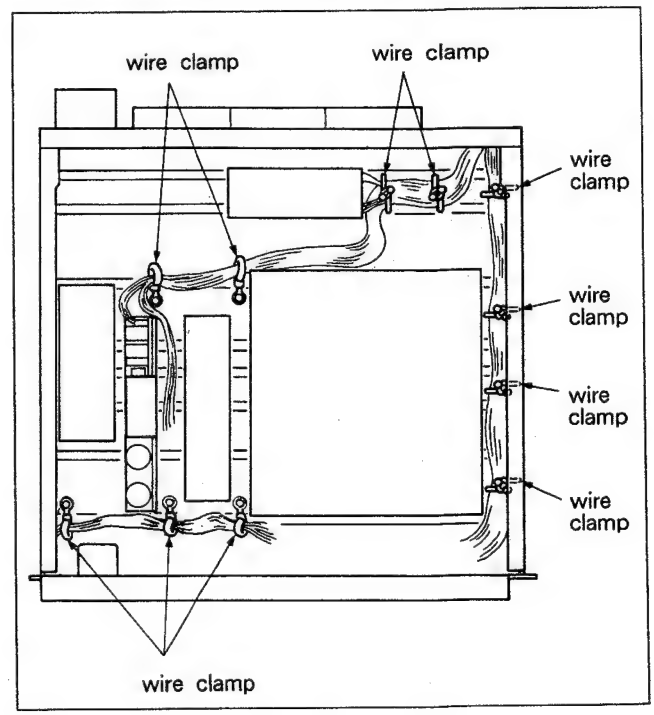

(4) Remove the screws that install the switching regulators.

① EWS600-5

Remove 2 screws of "a" (+PWH4x6) and loosen 2 screws of "b" (+PWH4x6).

② EWS50-5

Remove 2 screws of "c" (+PWH3x5) and loosen 1 screw of "d" (+PWH3x5).

③ LWT-4H522

Remove 1 screw of "e" (+PWH3x5) and loosen 1 screw of "f" (+PWH3x5).

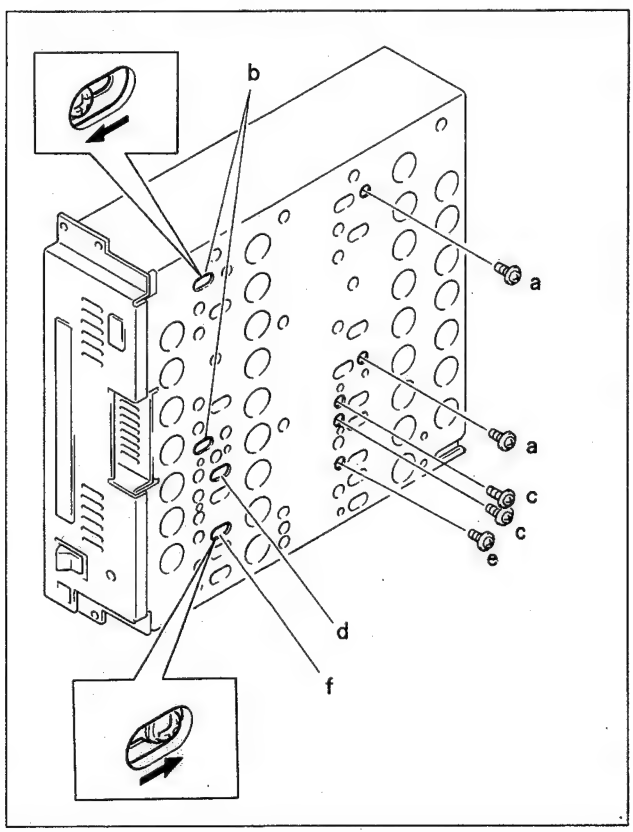

(5) Lift each switching regulator while pushing it in the direction of arrow as shown.

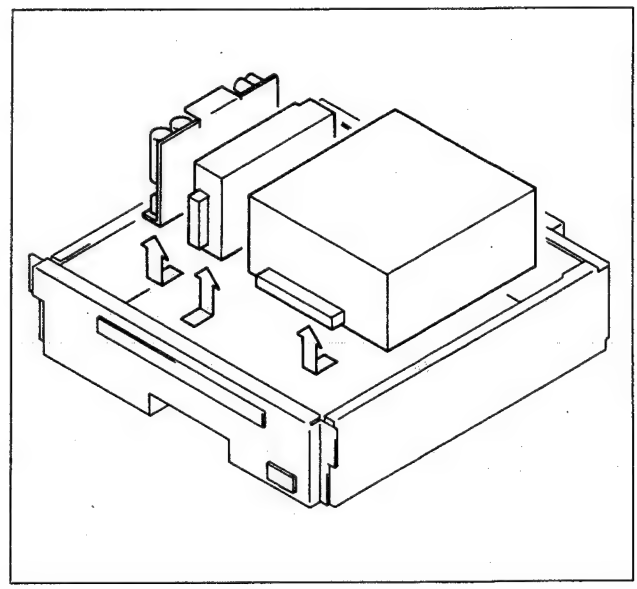

(6) Remove the harness and connectors.

① EWS600-5

Loosen 2 nuts of the switching regulator and disconnect the harness. Remove also the terminal cover and 4 screws to disconnect the harness.

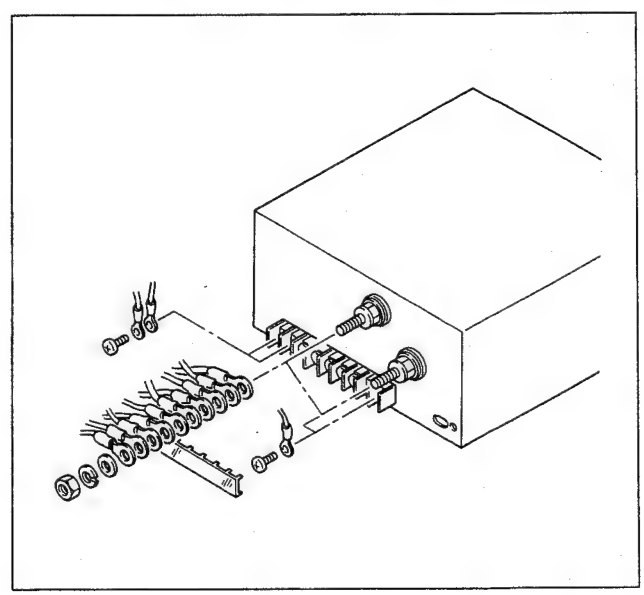

② EWS50-5

Remove the terminal cover and 4 screws of the switching regulator to disconnect the harness.

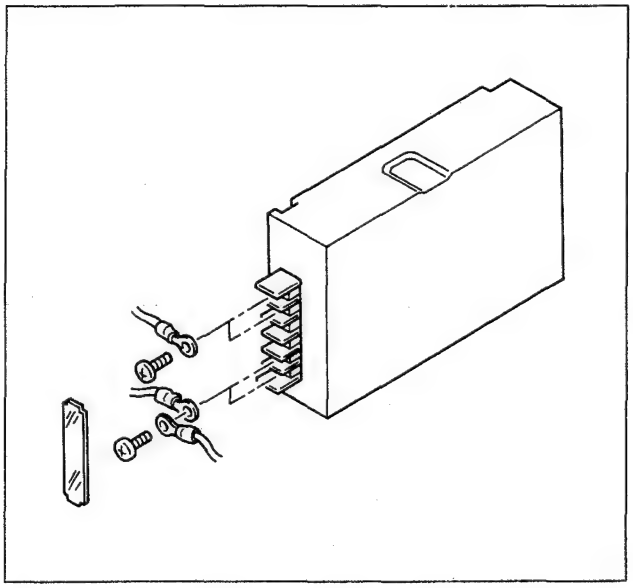

③ LWT-4H522

Disconnect 2 connectors of the switching regulator.

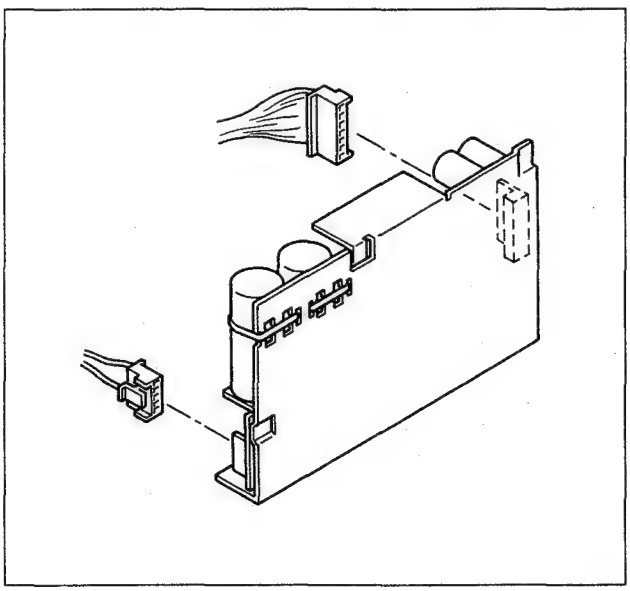

(7) Remove the switching regulator.

(8) Install the switching regulator in the reverse order of removal.

4-3. REPLACEMENT OF THE DC FAN

(1) Remove the front panel in the manner described in section 3-1.

(2) Remove 4 screws (+PWH4x8) and pull out the power unit in your direction.

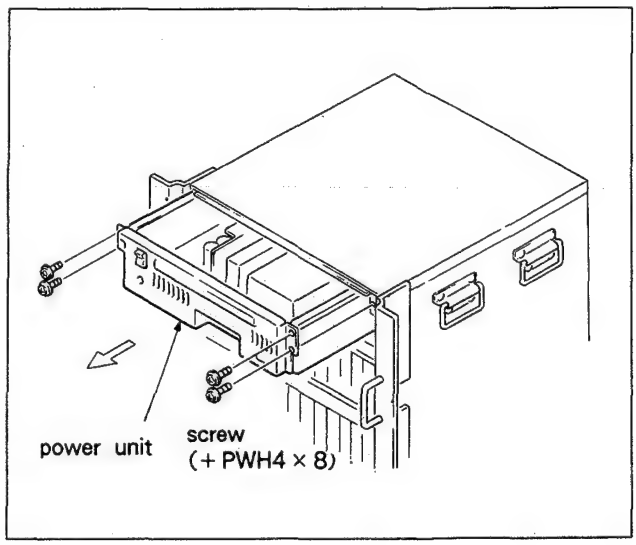

(3) Remove the harness from 2 wire clamps.

(4) Cut the wire clamps that fasten the connectors (CN4 and CN5).

(5) Disconnect the connectors (CN2, CN3, and CN4) on the CN-456 board.

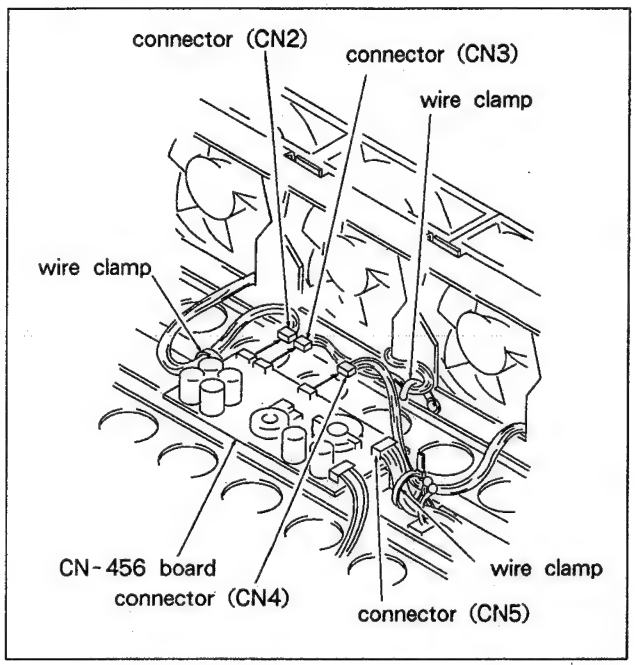

(6) Remove 4 screws (+ B4x30) and remove the DC fan.

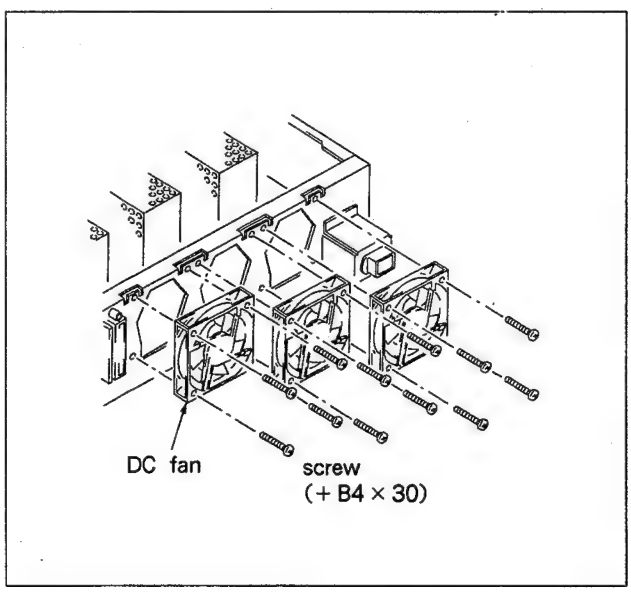

(7) Perform steps (1) to (6) in reverse to install the new DC fan.

SECTION 5
TECHNICAL INFORMATION

5-1. DEFECTIVE PARTS DIAGNOSTICS

(1) Trouble in BORDER, EXTKEY, MOSAIC, LIGHTING, and motion detect

If you turn ON 1, 2, and 3 of S1 on the DPR -15 board when there is any trouble in BORDER, EXTKEY, MOSAIC, LIGHTING, or motion detect, the Y, C, and K boards will assume a through mode. If the trouble can be corrected under this condition, the DPR-15 board is defective.

(2) Trouble in RECURSIVE effect, DROPSHADOW, MULTI FREEZE, and MONTAGE.

If you turn ON 1, 2, and 3 of S7 on the DPR -16 board when there is any trouble in RECURSIVE effect, DROPSHADOW, MULTI FREEZE, and MONTAGE effect, the Y, C, and K boards will assume a through mode. If the trouble can be corrected under this condition, the DPR-16 board is defective.

(3) Trouble in MIRROR, SPLIT, and MULTI MOVE effect.

If you turn ON 1 of S8 on the DPR-18 board when there is any trouble in the shifting, enlargement/reduction, rotation, and non-linear shape effect of the image, the address at the read side will be passed. If the MIRROR, SPLIT, and MULTI MOVE effect trouble can be corrected under this condition, the DPR-18 board is defective.

(4) Trouble in Y, C, or K board during shifting, enlargement/reduction, and rotation.

If you turn ON 1 of S4 on the MEM-41 board when there is any trouble in the Y, C, or K board during shifting, enlargement/reduction, or rotation, the memory will be passed. If the trouble can be corrected under this condition, one of the boards MEM-41 (Y), MEM-41 (C), or MEM-41 (K) is defective.

(5) Trouble during reduction (when using the LOW PASS filter)

If you turn ON 1, 2, and 3 of S1 on the DLP -9 board when there is an image trouble during a particular reduction which uses the LOW PASS filter to cope with the reduction rate during reduction, the Y, C, and K boards will assume the through mode. If the trouble can be corrected under this condition, the DLP-9 board is defective.

(6) Vertical/horizontal address error

When there is a vertical/horizontal address error, if the error cannot be corrected after turning ON 1 of S4 on the MEM-41 board (any one of the Y, C, or K board) and 1 of S8 on the DPR-18 board, the DPR-17 board is possibly defective.

(7) Trouble in shifting, enlargement/reduction, and rotation

When there is a trouble during shifting, enlargement /reduction, or rotation, if the trouble is corrected by turning ON S8 on DPR-18 board, the ALU -11 board is possibly defective.

(8) Power supply trouble

- Trouble in the fan and POWER lamp indicates a defective +5V system of LWT-4HA522 (switching power of the multi-output).
- If the LEDs (D1 to D8) on the CPU-82 board do not light at all, the EWS600-5 power (+5V) supply is possibly defective.
- Pull out the power supply unit and make sure that the power LED on the EWS600-5 power supply is illuminating.
- If there is no analog output (sync/burst) when the analog video output power is tested using an oscilloscope, the ±12V supply is defective.
- When only in the digital serial is unfunctional, the −5V system of the EWS50-5 power supply is possibly defective.
- Pull out the power supply unit and make sure that the power LED on the EWS50-5 power supply is illuminating.

5-2. SELF-DIAGNOSTICS

The CPU-82 board self-diagnostics can be performed using the SET UP menu of the control panel. See the Operation Manual of the control panel for details.

SECTION 6
BLOCK DIAGRAM

OVERALL

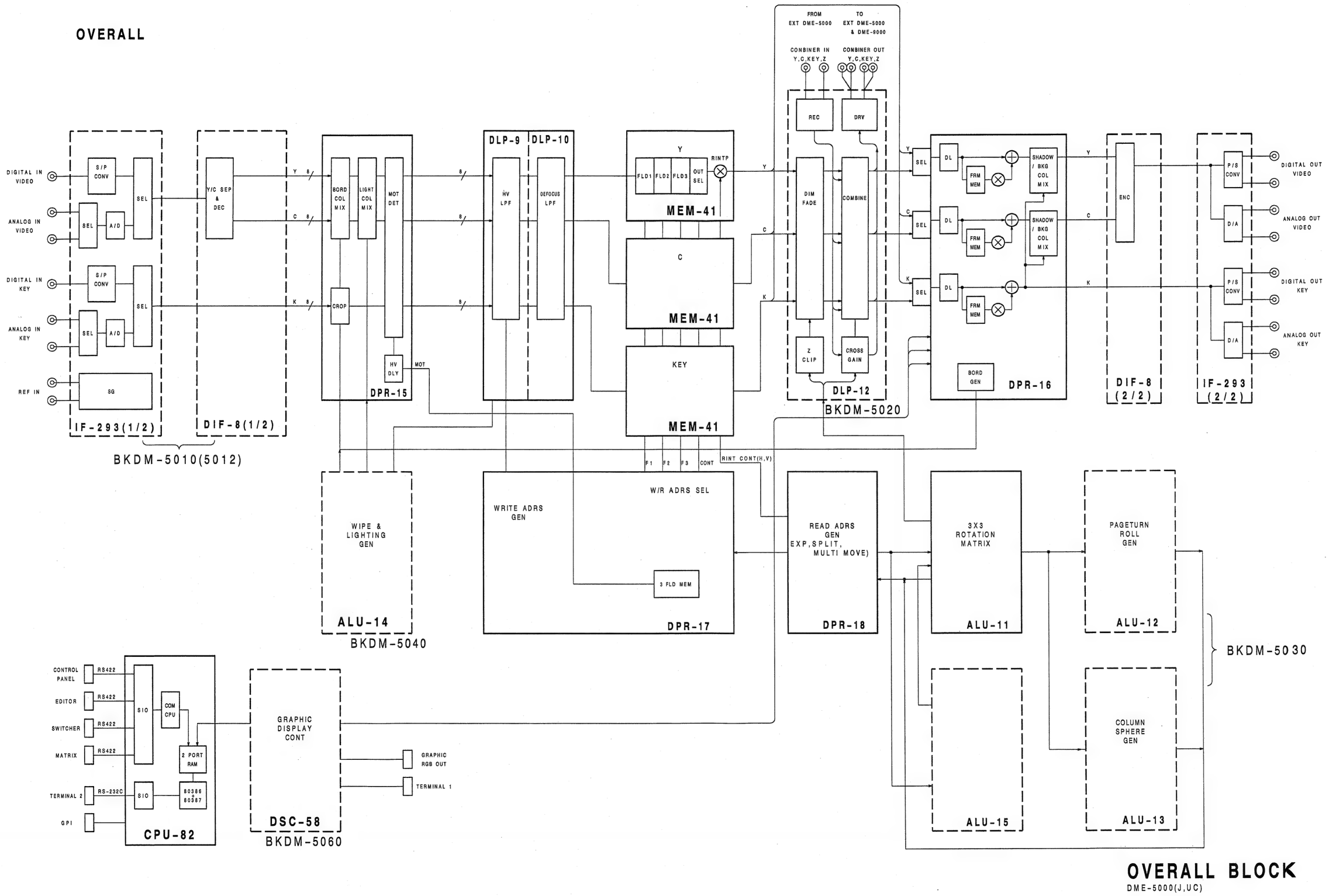

OVERALL BLOCK

DME-5000(J,UC)

6-3 6-4

A B C D E F G H

REAL TIME NUMERIC DATA PROCESSOR

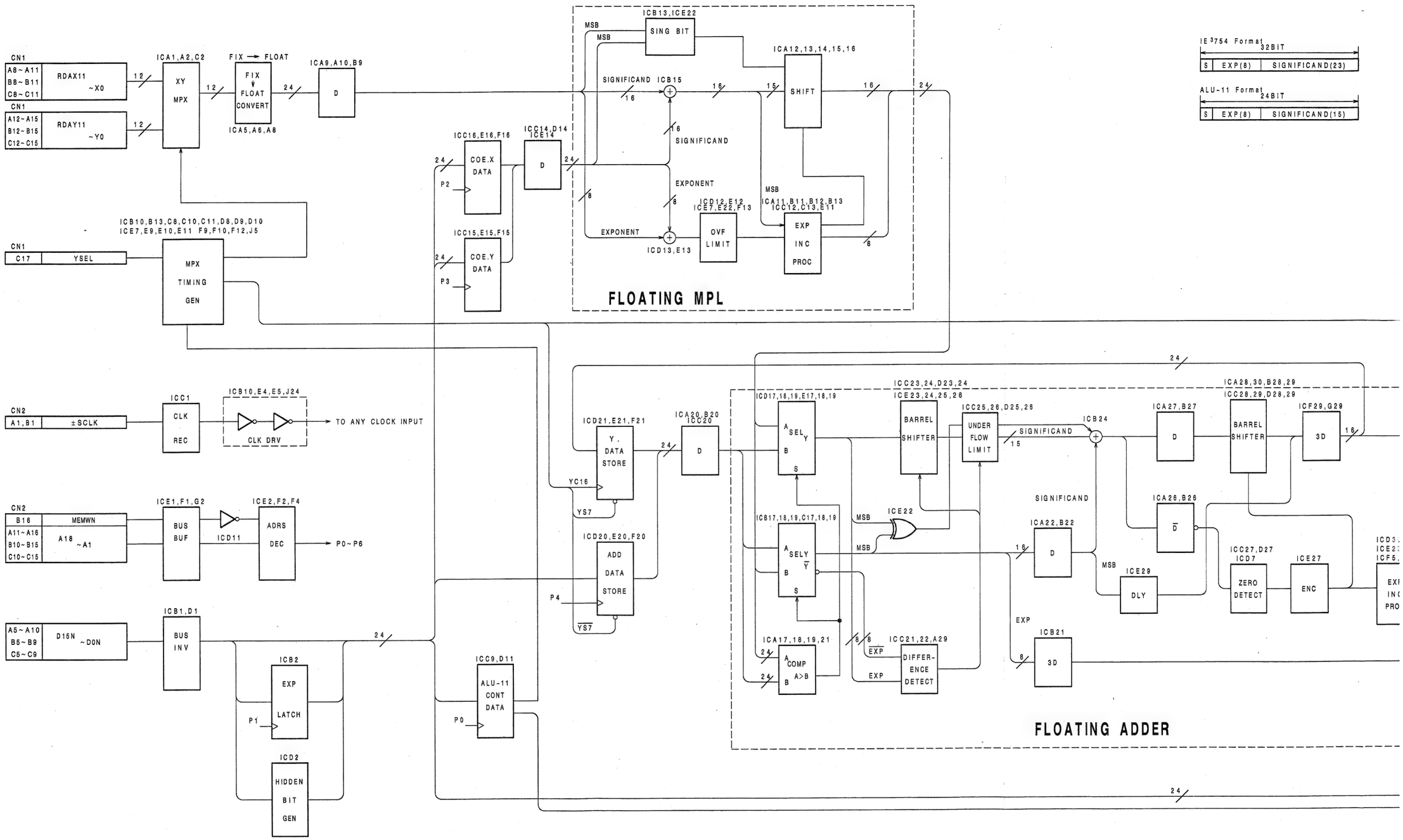

IEEE 754 Format

32BIT		
S	EXP(8)	SIGNIFICAND(23)

ALU-11 Format

24BIT		
S	EXP(8)	SIGNIFICAND(15)

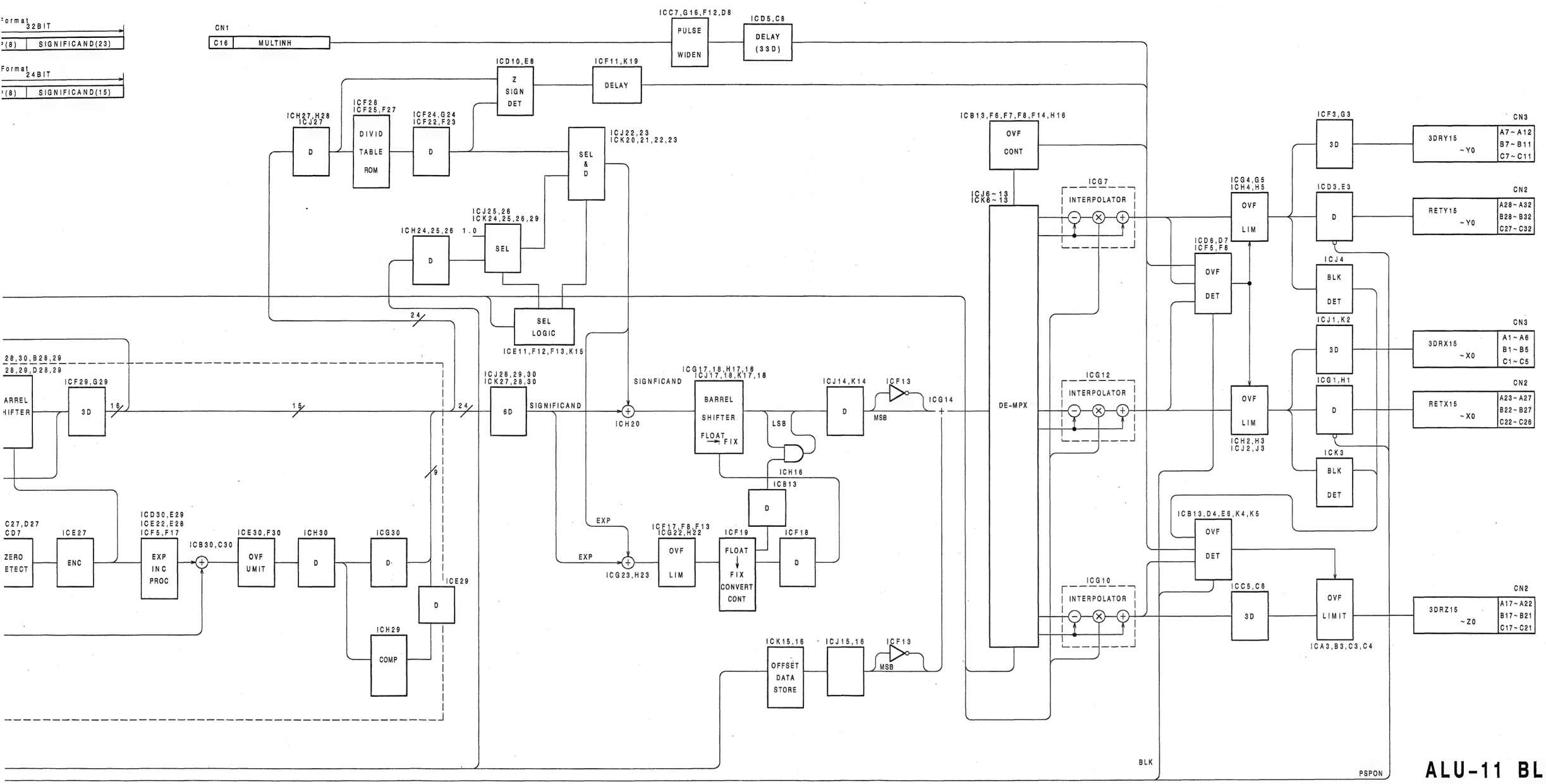

ALU-11 BLOCK

DME-5000(J,UC)

SYSTEM CONTROL AND COMMUNICATIONS

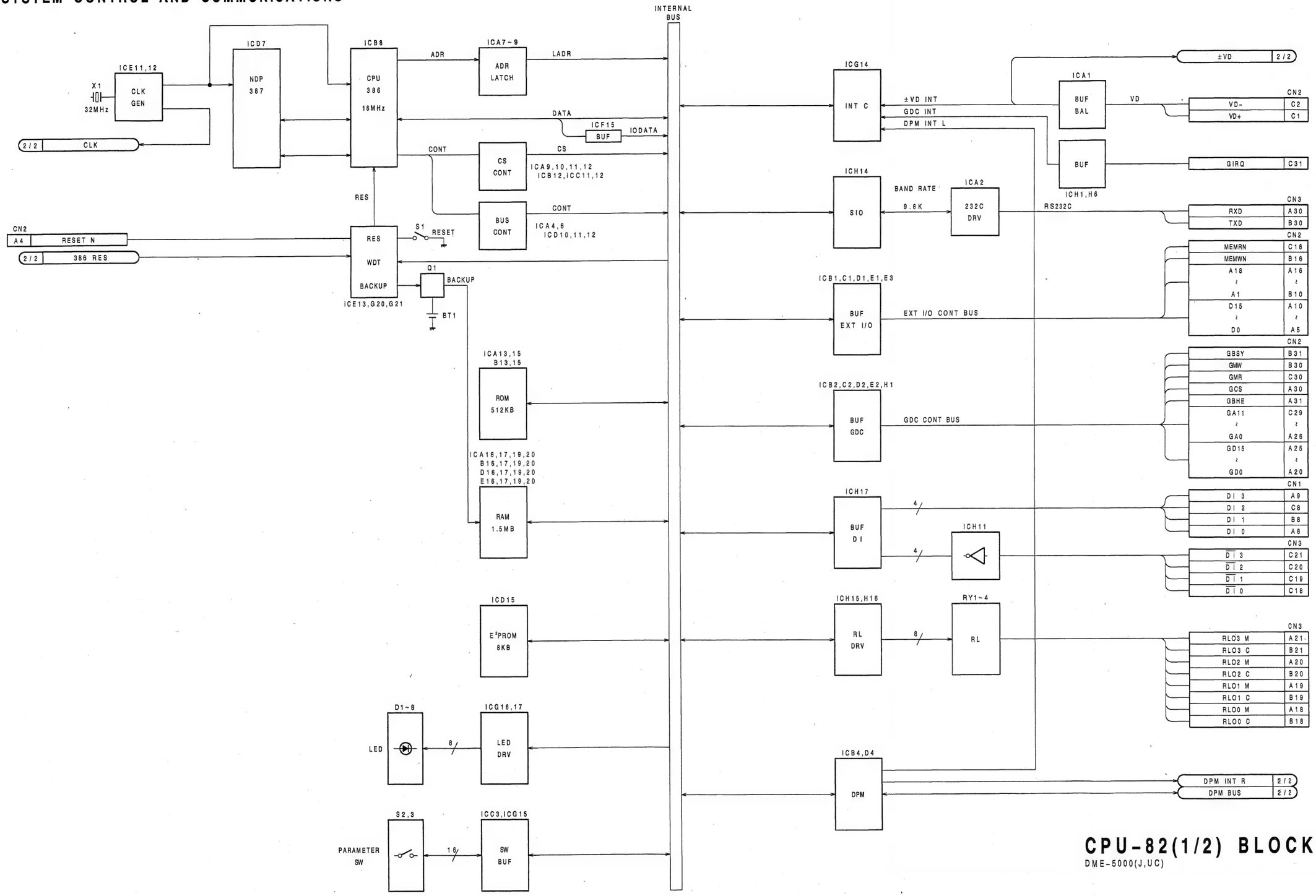

CPU-82(1/2) BLOCK

DME-5000(J,UC)

CPU-82(1/2) CPU-82(1/2)

6-11

I J K L M N O P

6-12

SYSTEM CONTROL AND COMMUNICATIONS

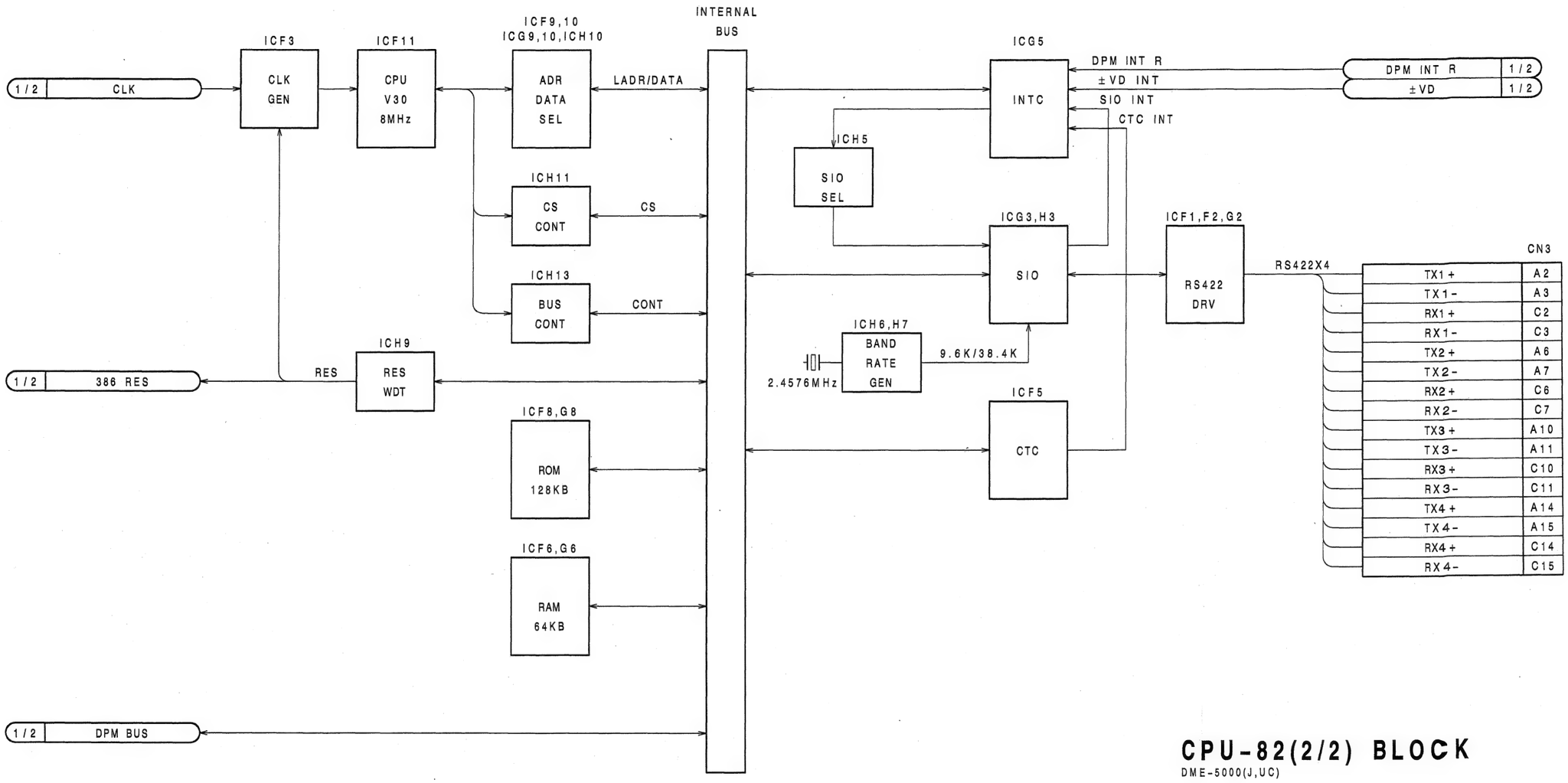

CPU-82(2/2) BLOCK

DME-5000(J,UC)

HORIZONTAL AND VERTICAL LOW PASS FILTER

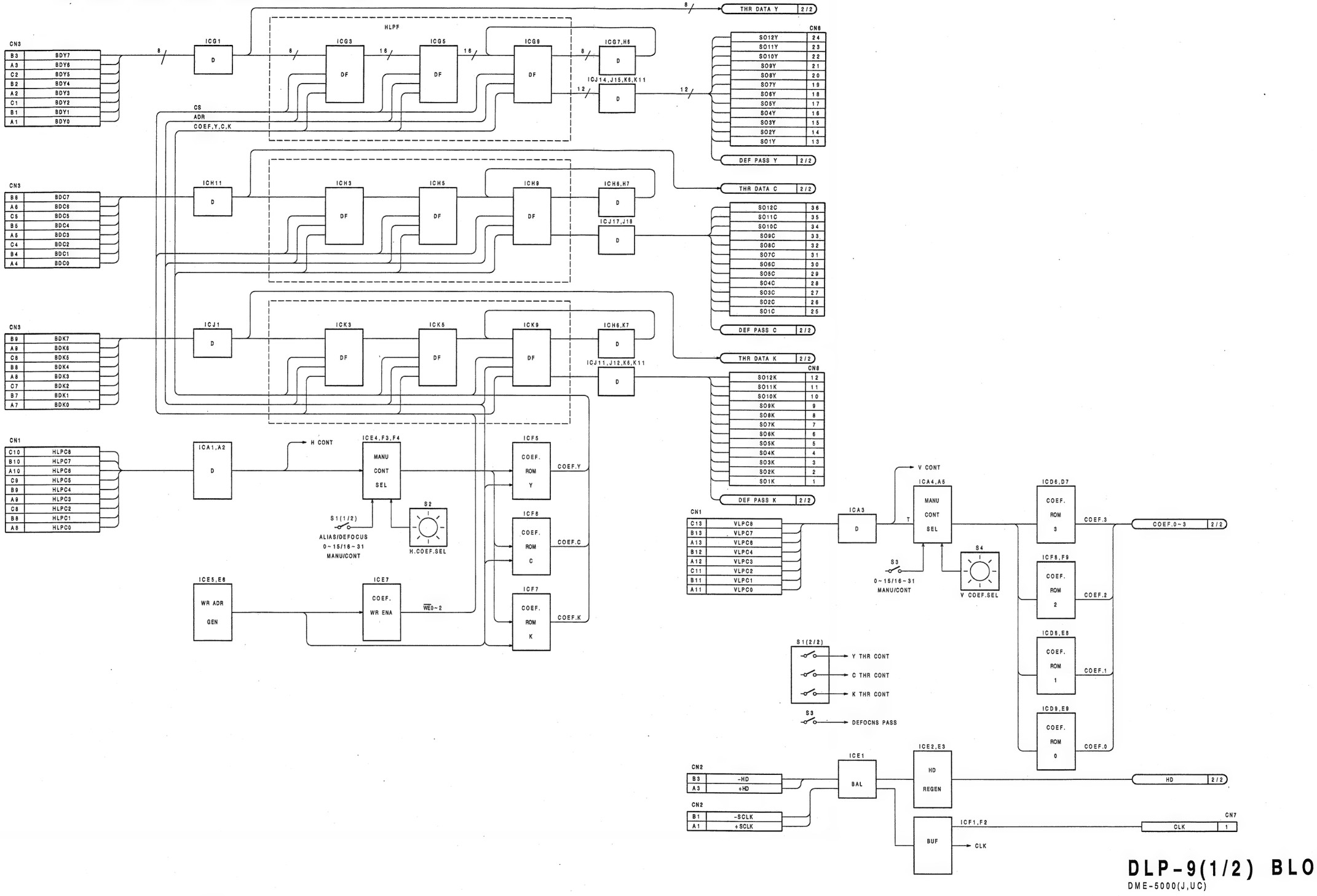

DLP-9(1/2) BLOCK

DME-5000(J,UC)

HORIZONTAL AND VERTICAL LOW PASS FILTER

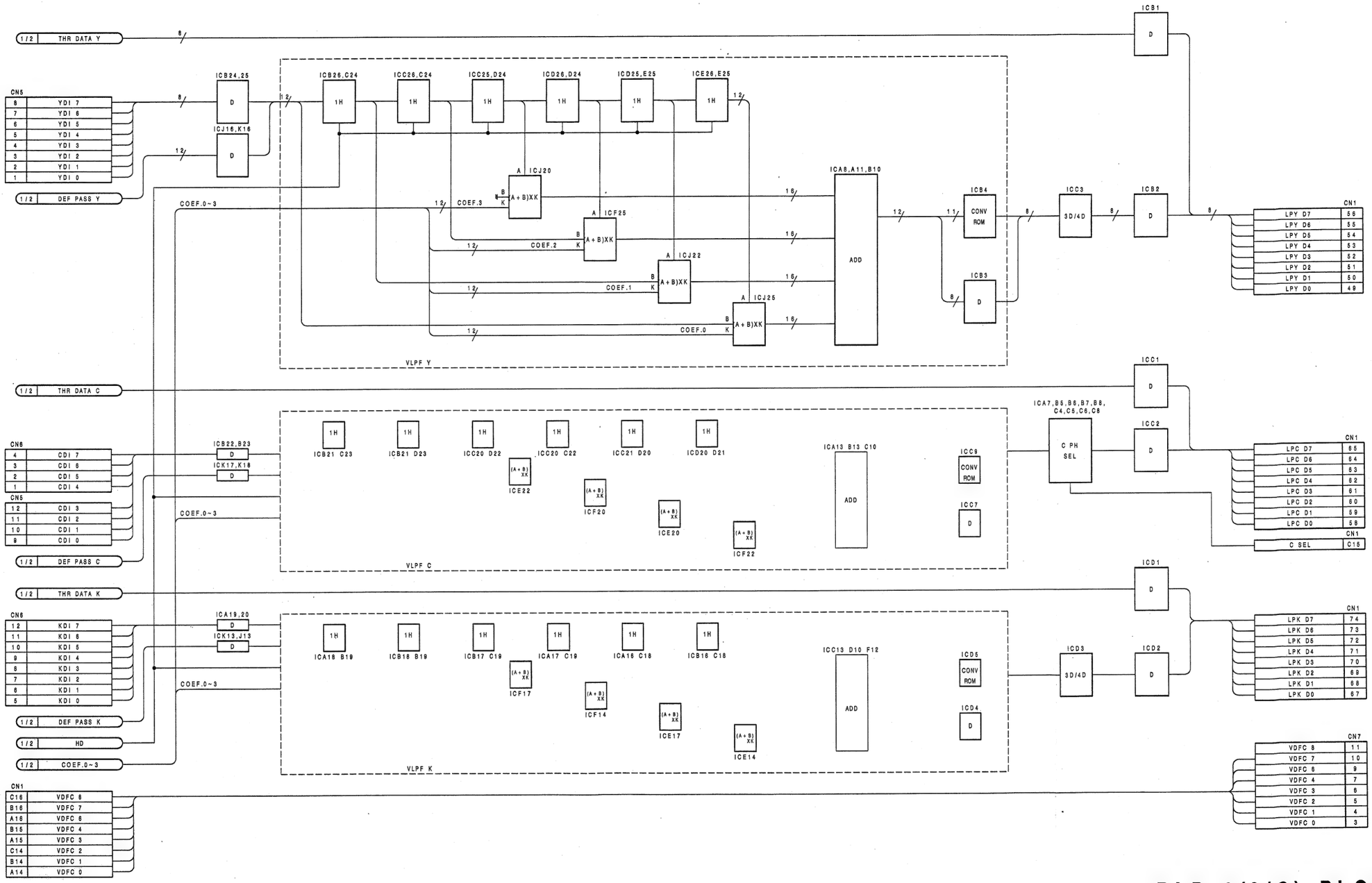

DLP-9(2/2) BLOCK

DME-5000(J,UC)

IIR VERTICAL LOW PASS FILTER

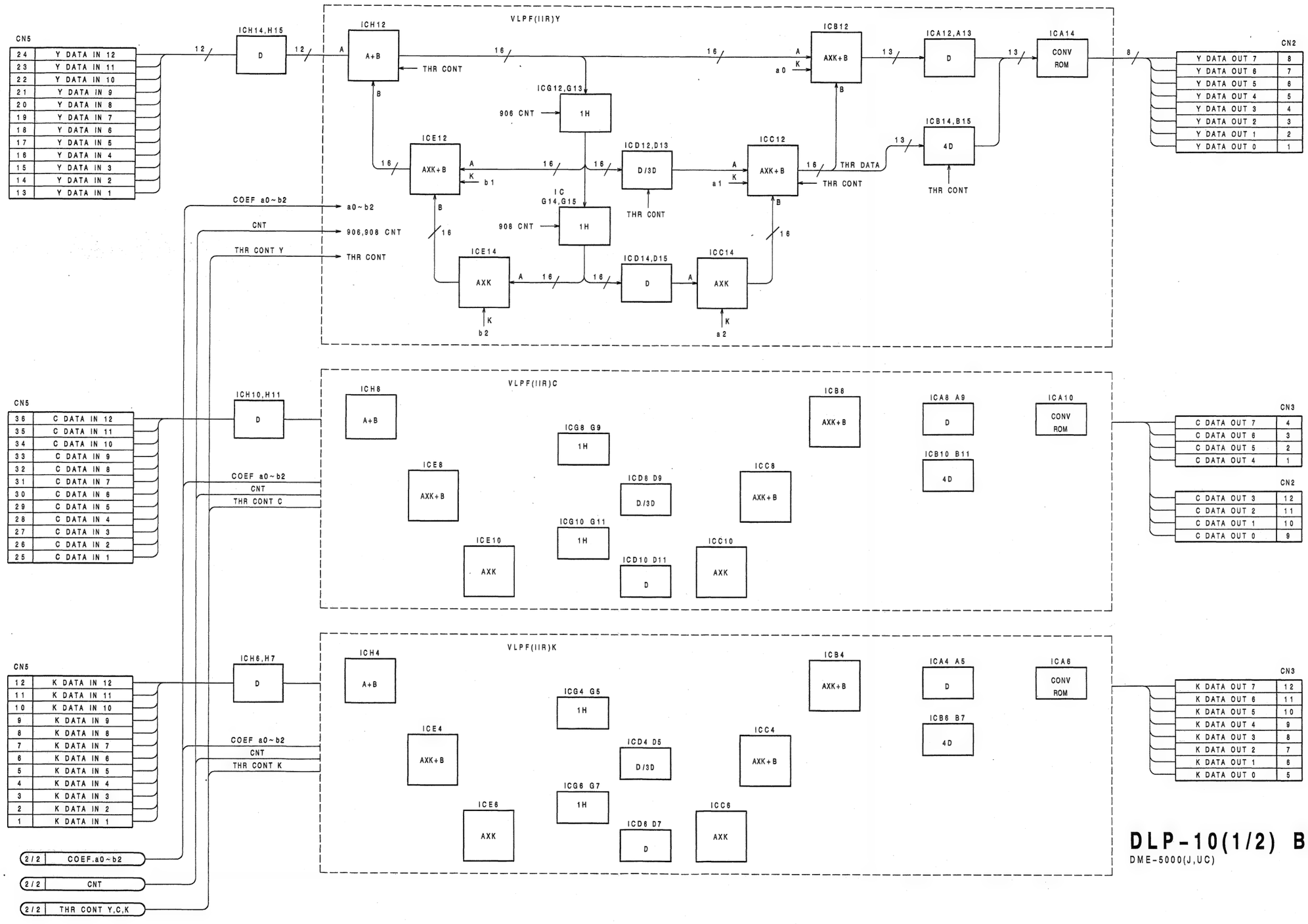

DLP-10(1/2) BLOCK
DME-5000(J,UC)

IIR VERTICAL LOW PASS FILTER

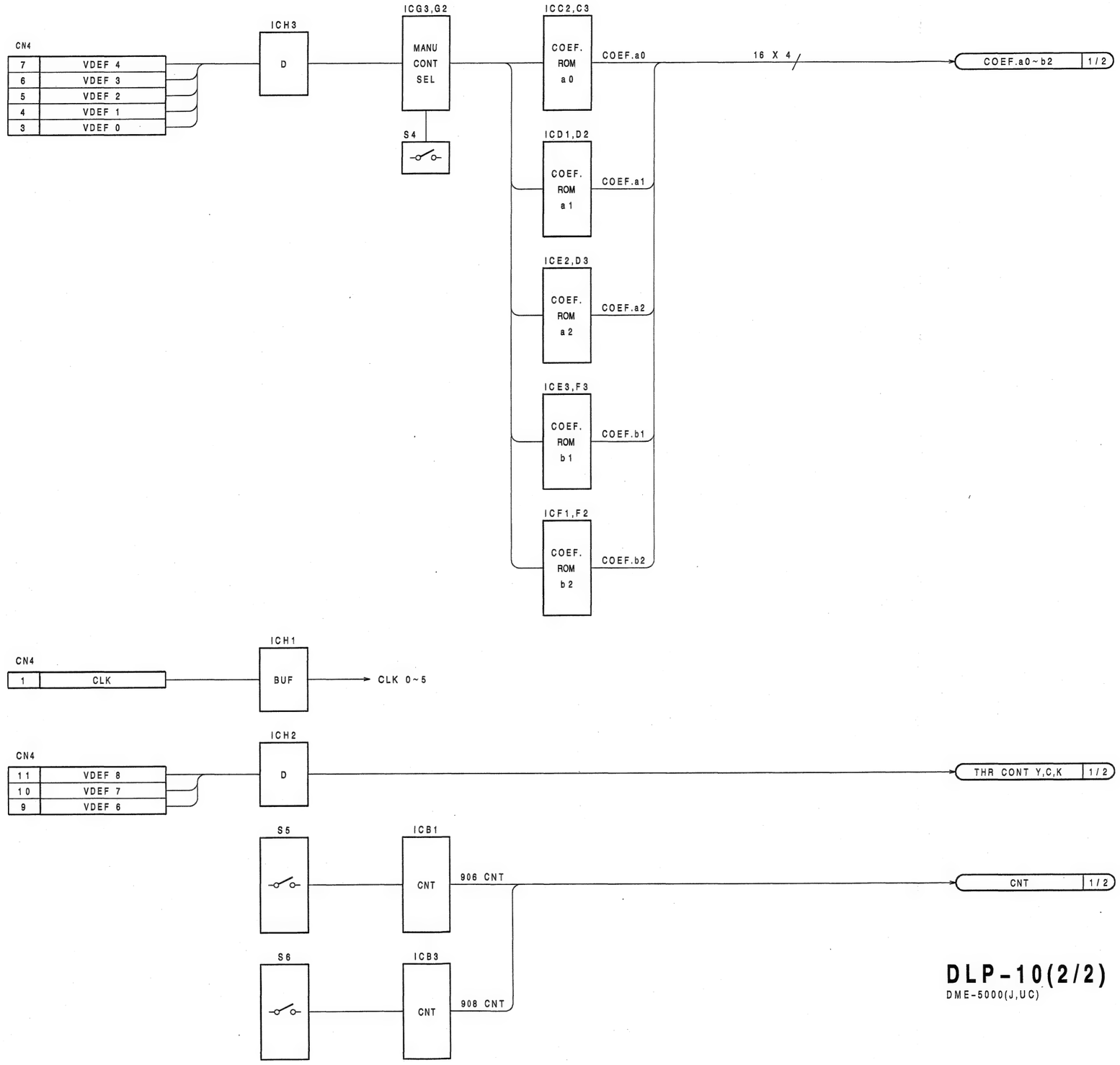

DLP-10(2/2) BLOCK

DME-5000(J,UC)

INPUT PIXEL EFFECT GENERATOR AND MONITOR DETECT

DPR-15(1/2) BLOCK

DME-5000(J,UC)

INPUT PIXEL EFFECT GENERATOR AND MONITOR DETECT

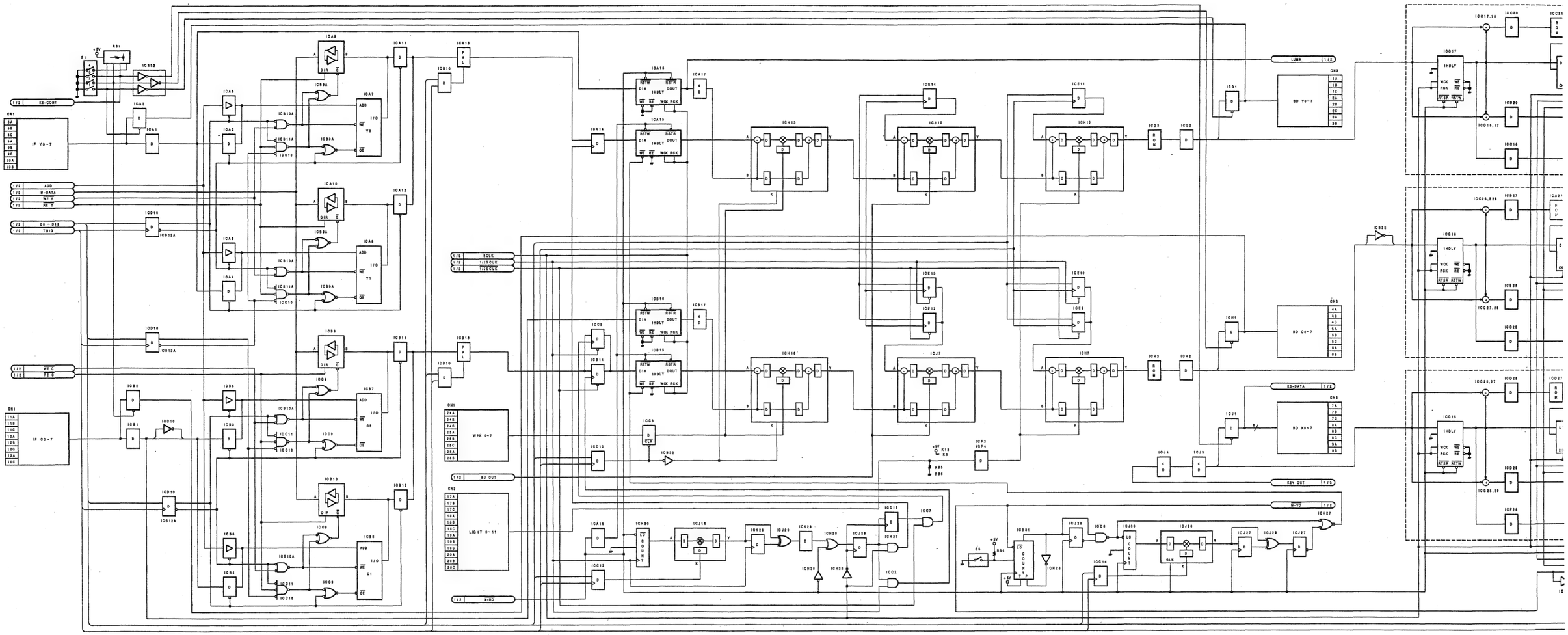

DPR-15(2/2)

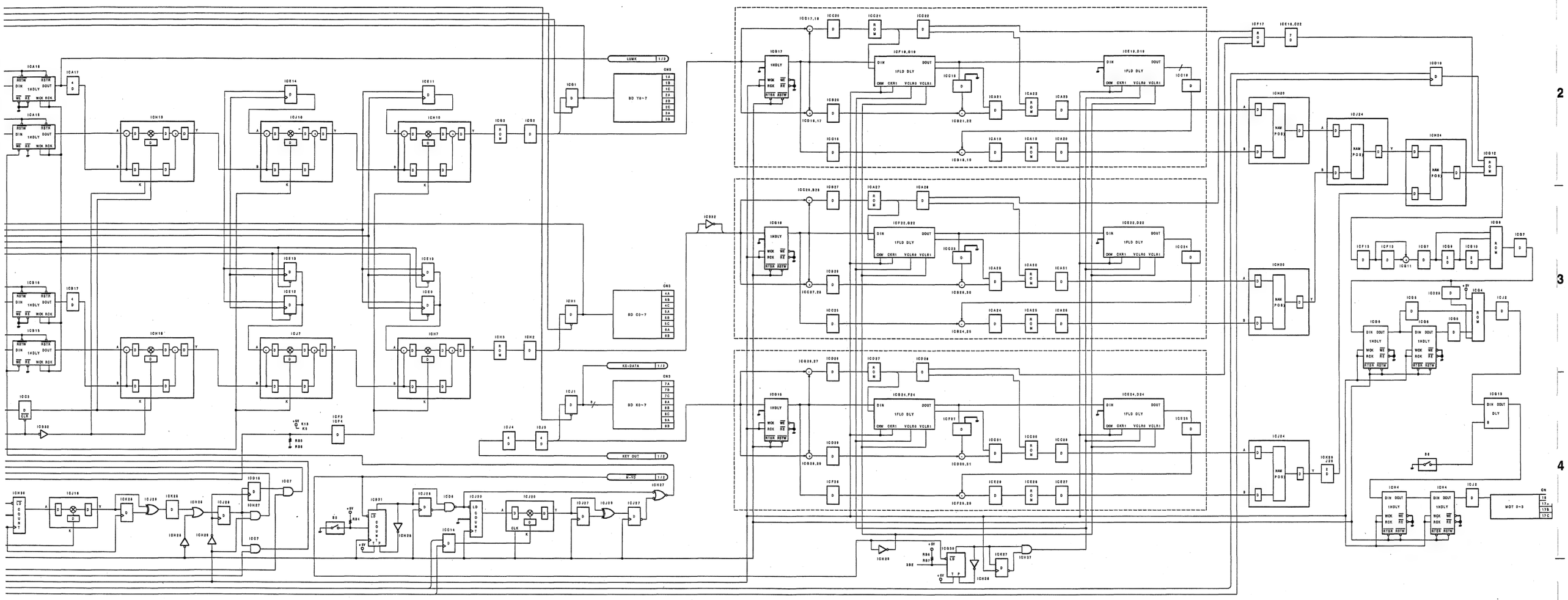

DPR-15(2/2) BLOCK

DME-5000(J,UC)

OUTPUT RECURSIVE EFFECT GENERATOR AND BORDER GENERATOR

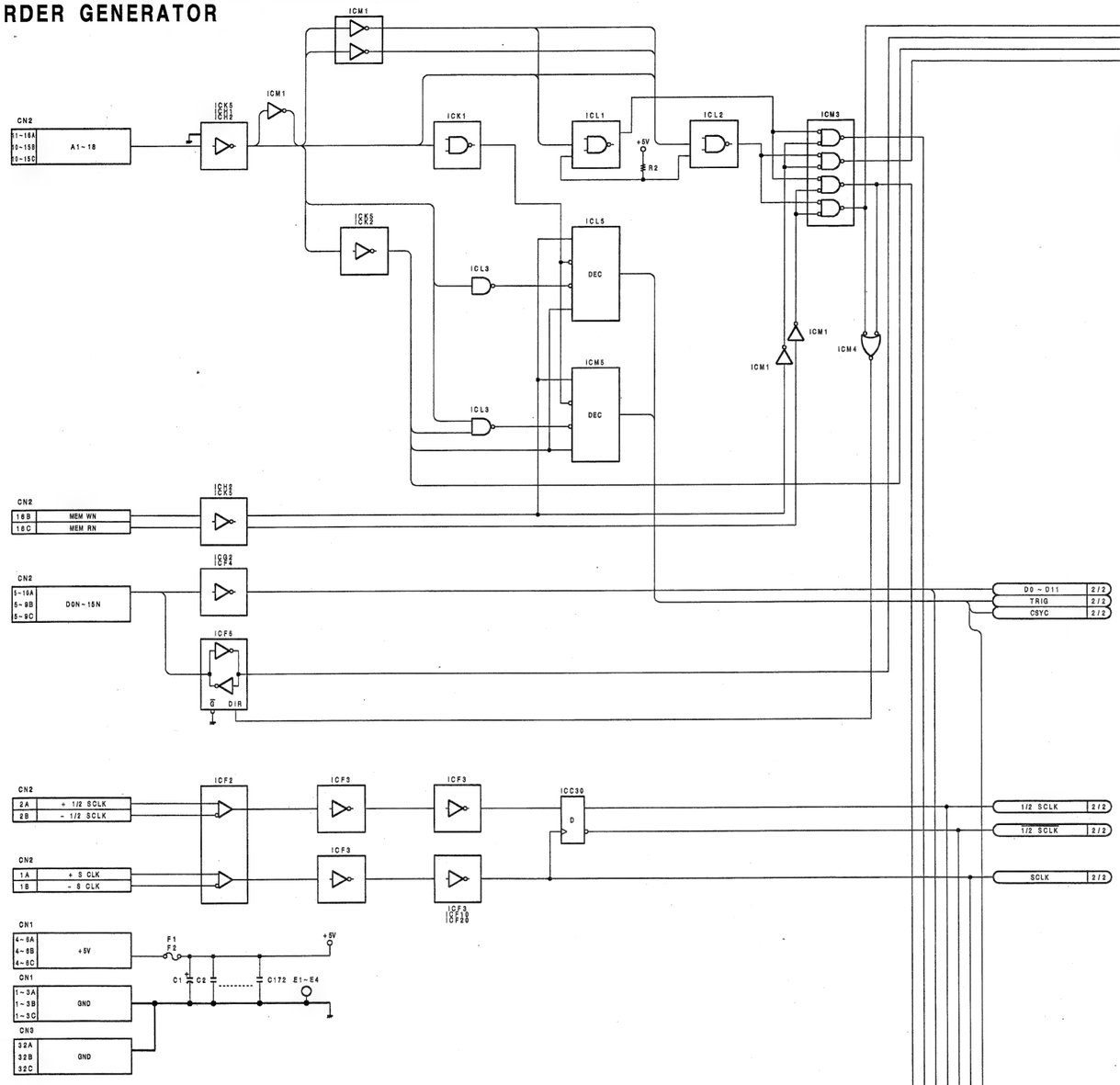

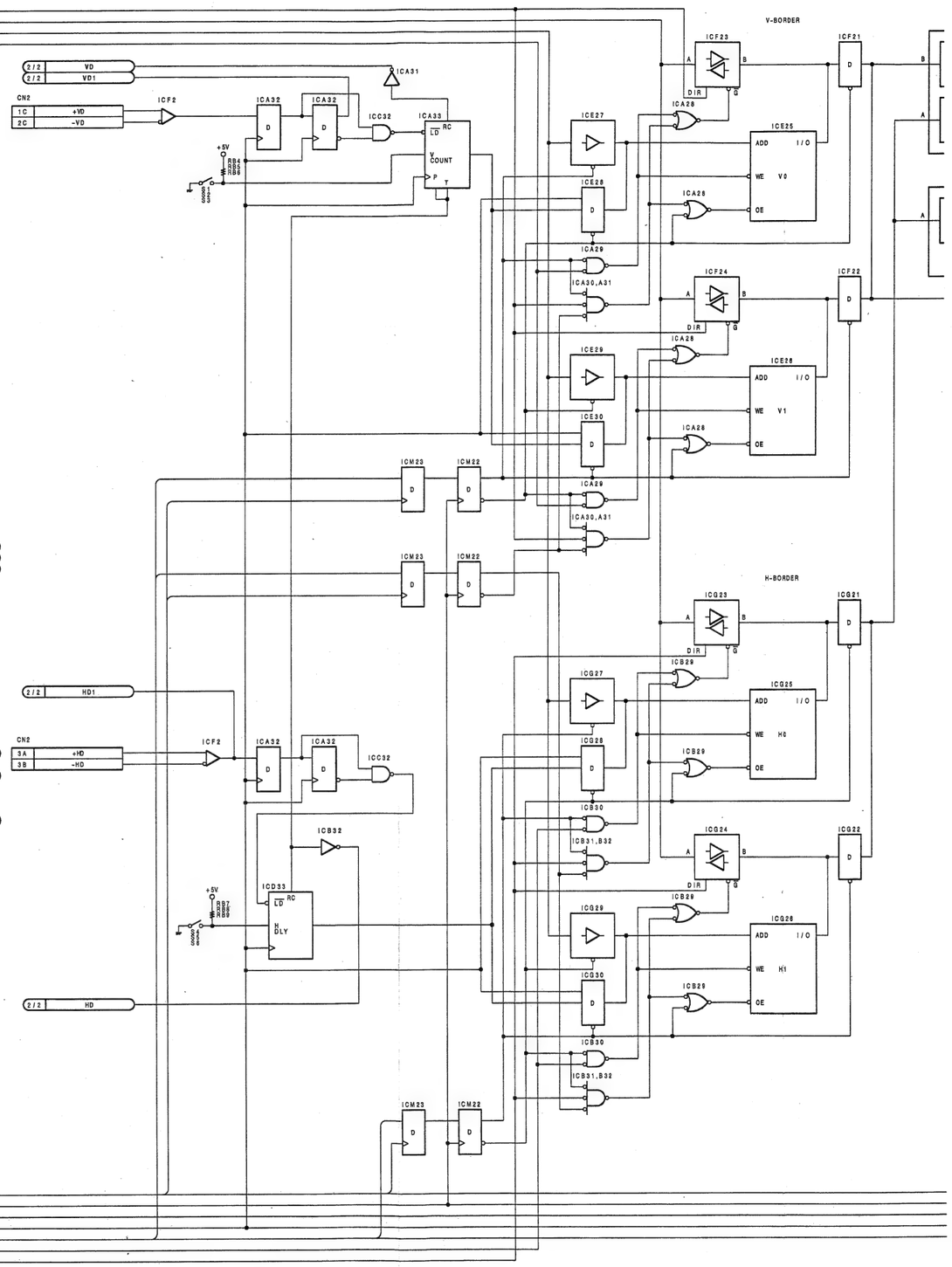

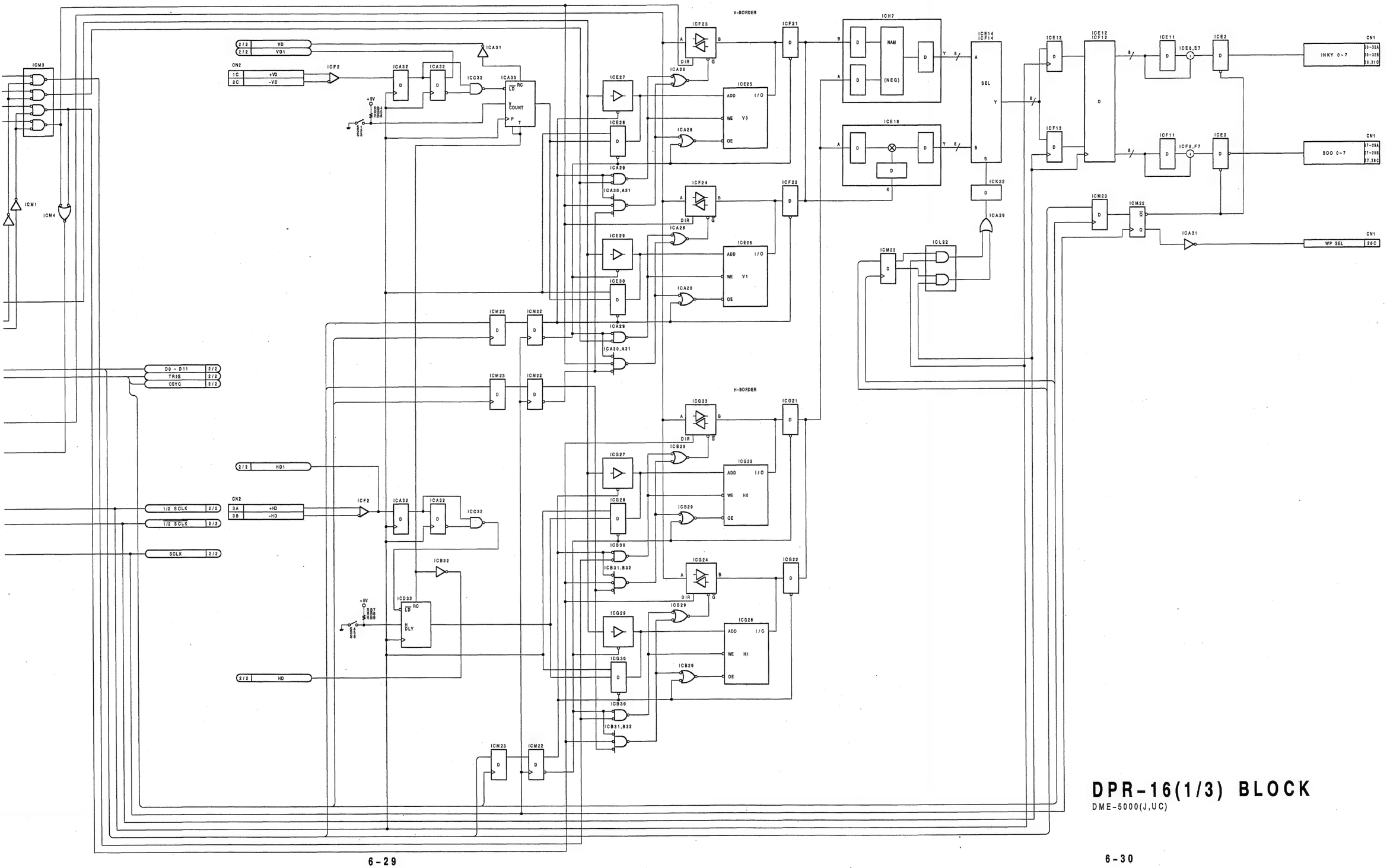

6-29

6-30

DPR-16(1/3) BLOCK

DME-5000(J,UC)

OUTPUT RECURSIVE EFFECT GENERATOR AND BORDER GENERATOR

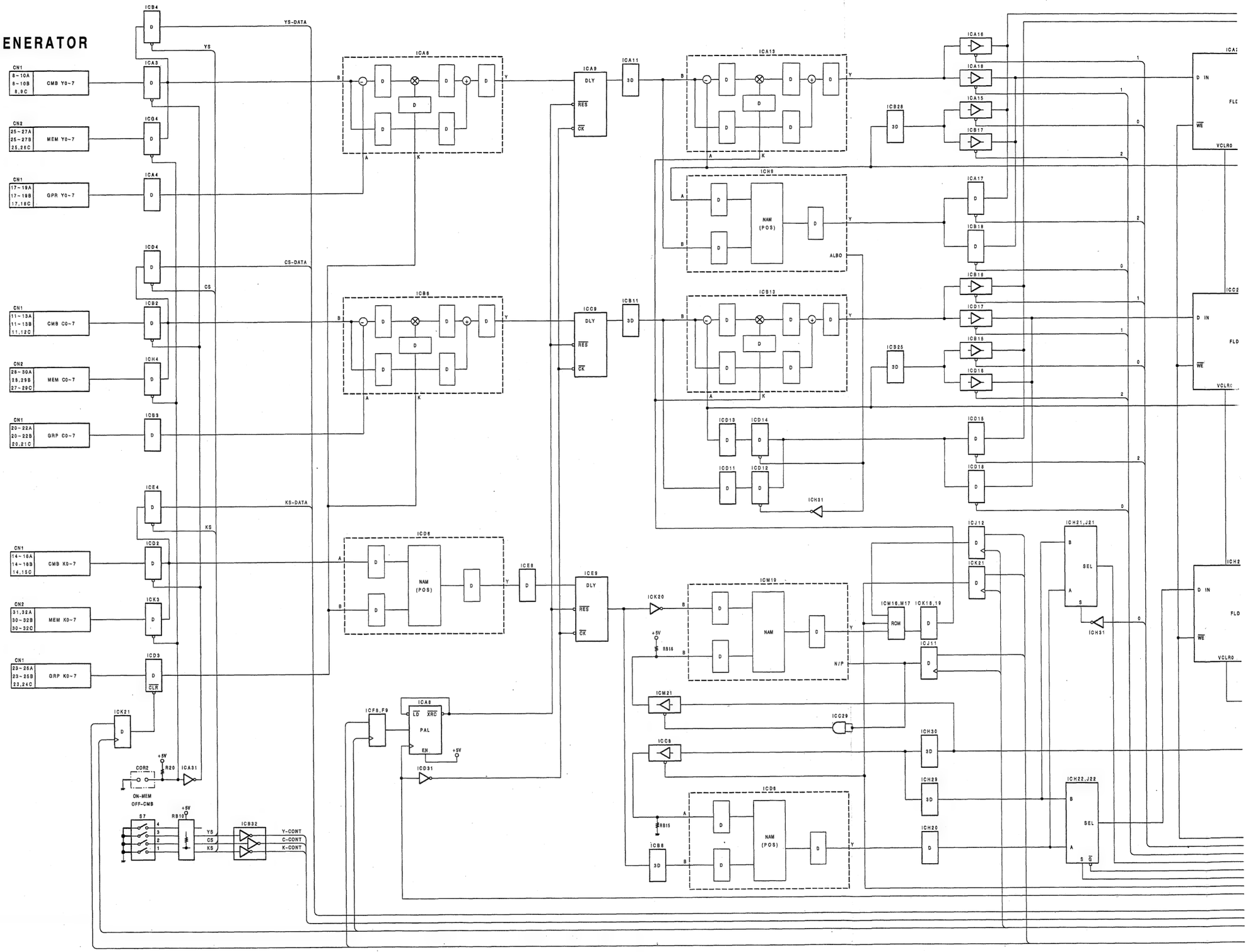

6-31 6-32

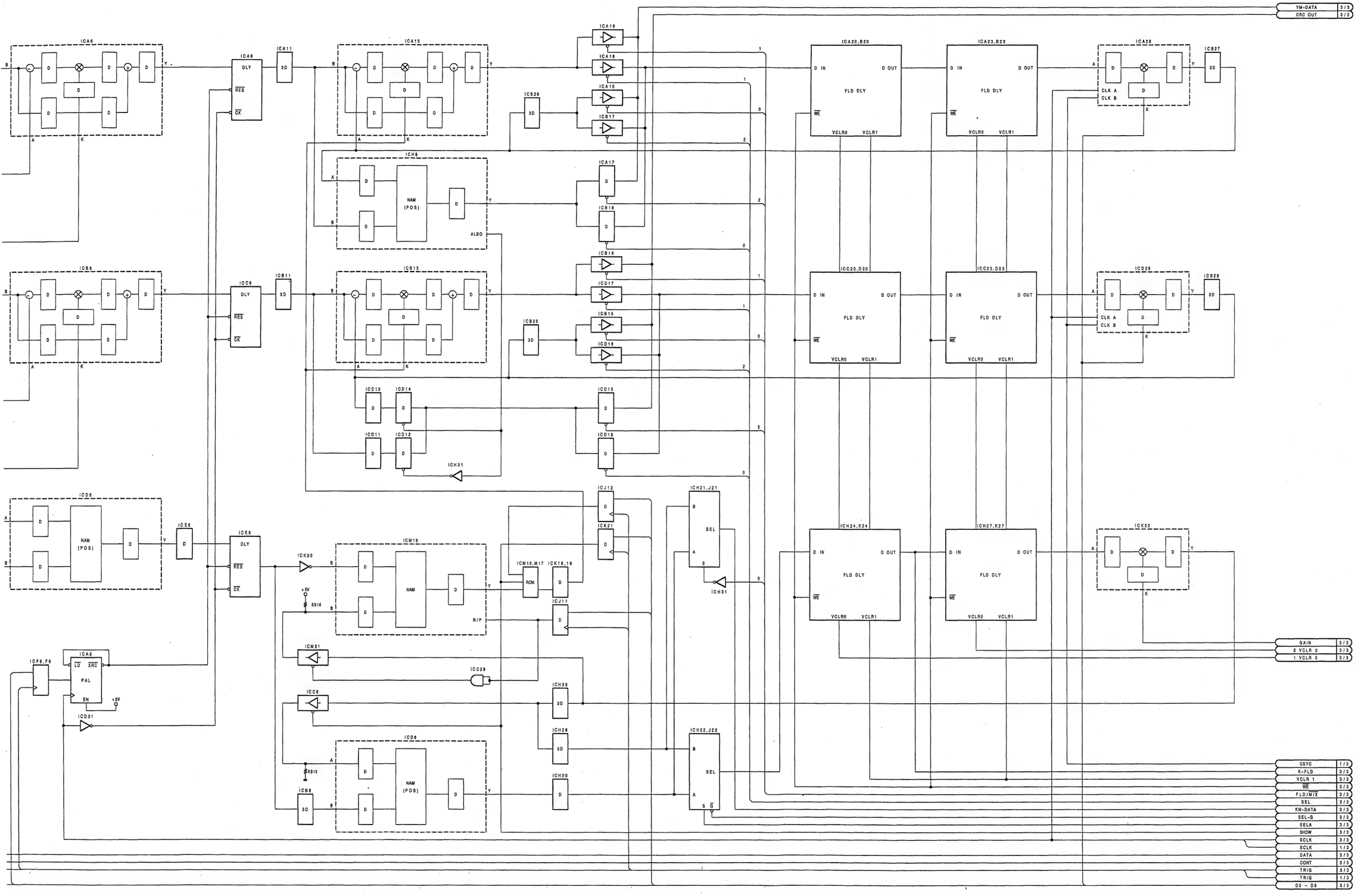

6-32

6-33

E F G H I J K L

OUTPUT RECURSIVE EFFECT GENERATOR AND BORDER GENERATOR

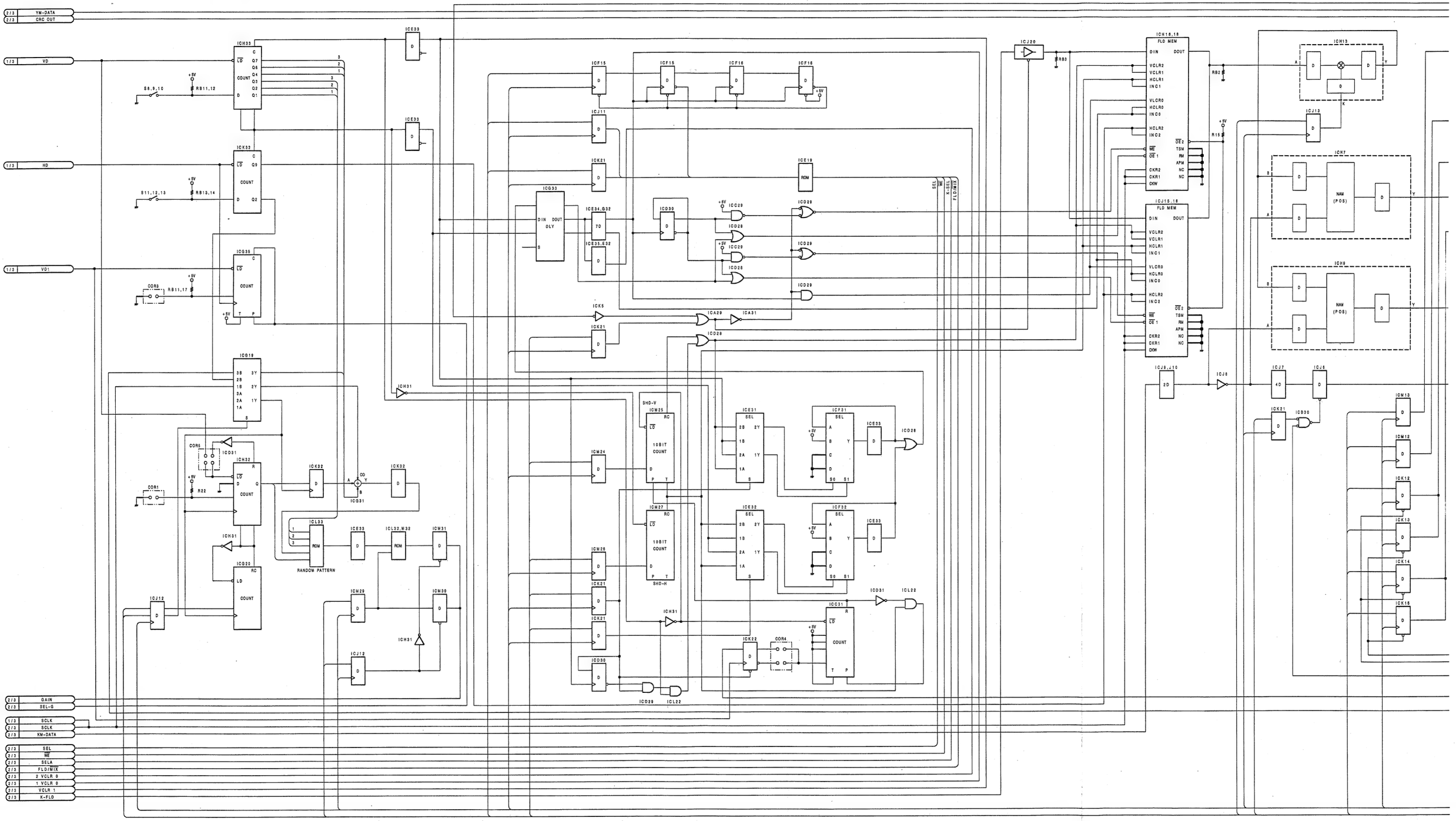

6-34 6-35

A B C D E F G H

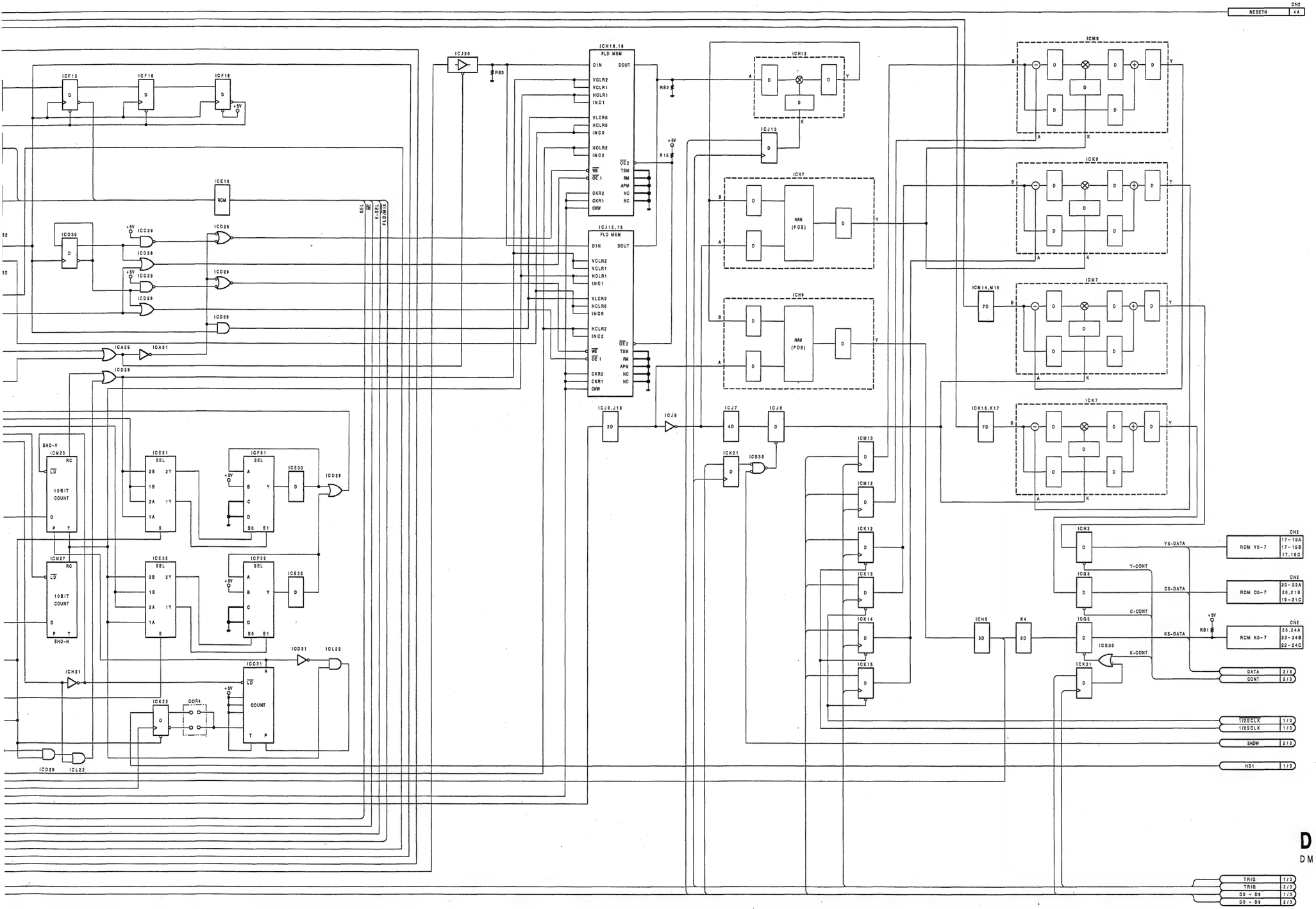

DPR-16(3/3) BLOCK

DME-5000(J,UC)

MEMORY ADDRESS SELECTOR AND WRITE ADDRESS GENERATOR

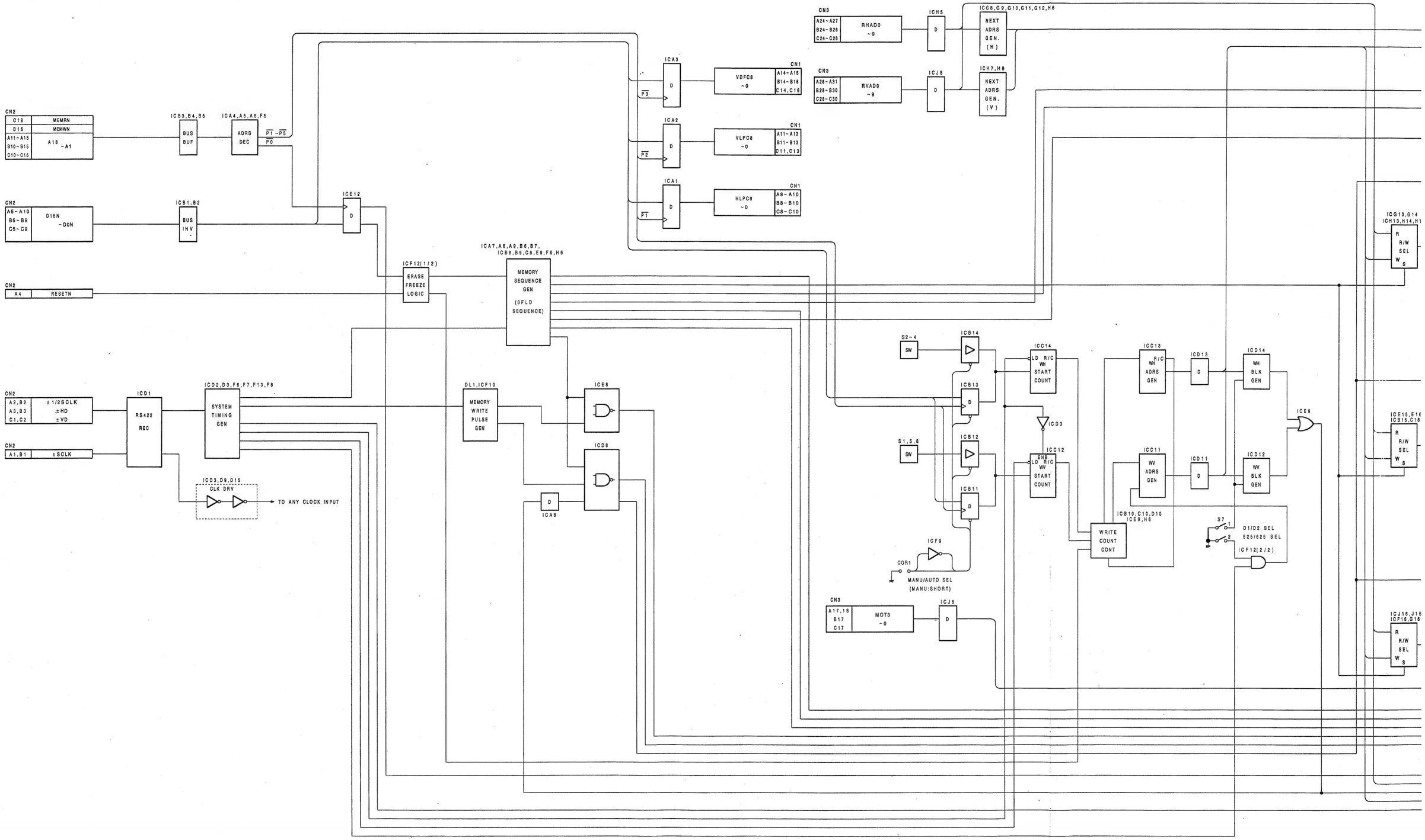

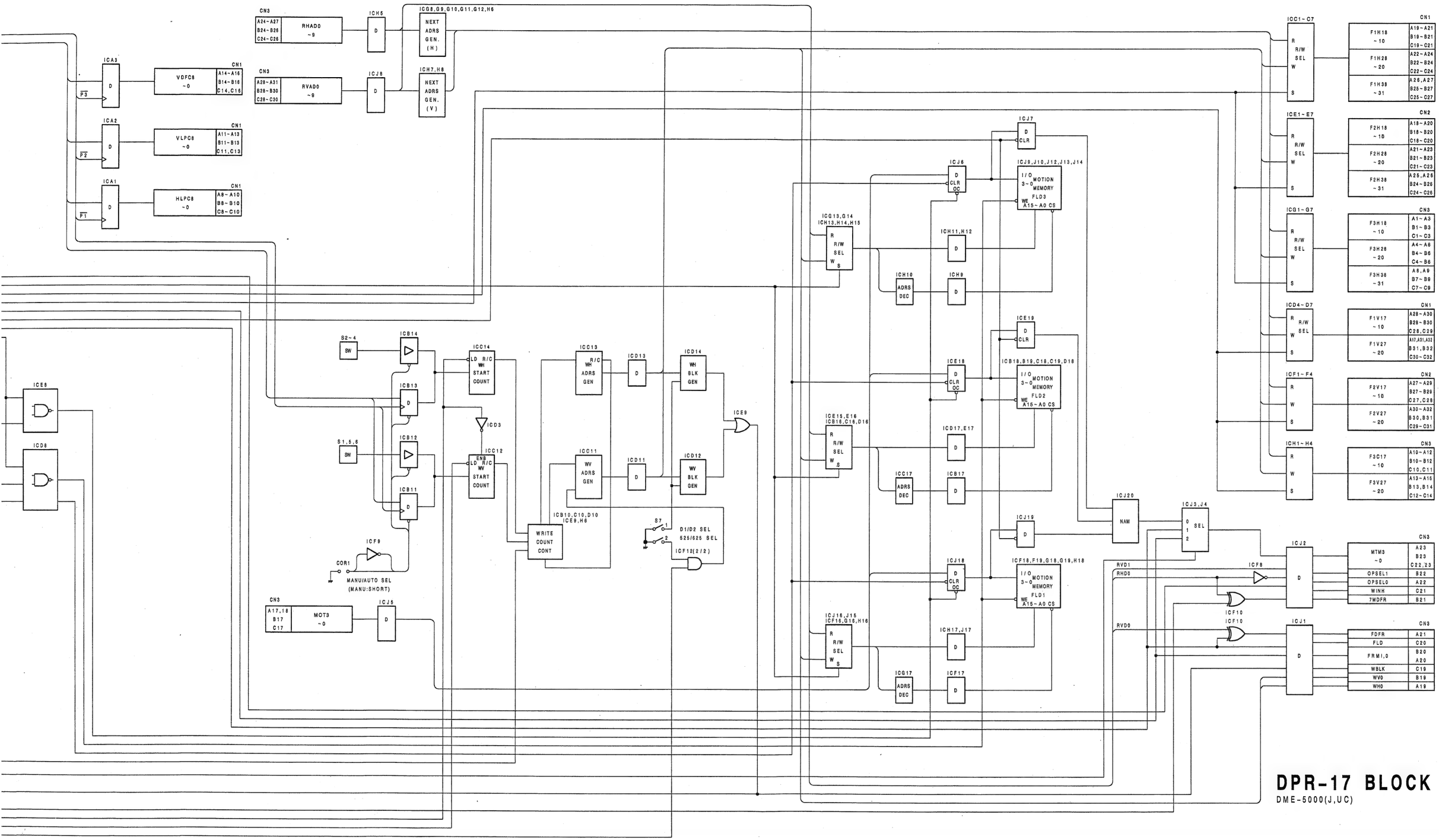

DPR-17 BLOCK

DME-5000(J,UC)

3 FIELD VIDEO MEMORY AND INTERPOLATOR

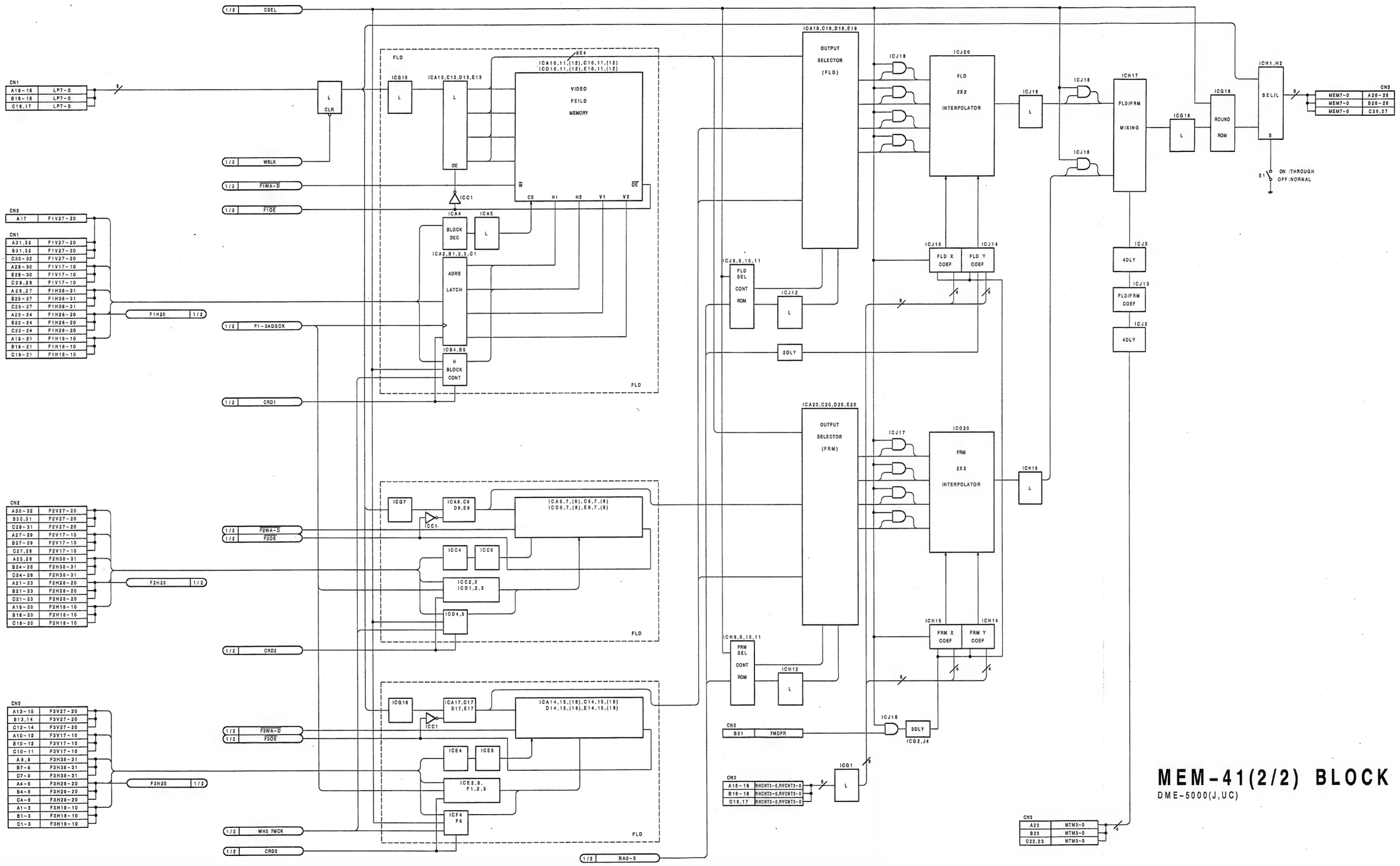

MEM-41(2/2) BLOCK

DME-5000(J,UC)

READ ADDRESS GENERATOR AND SPLIT MIRROR GENERATOR

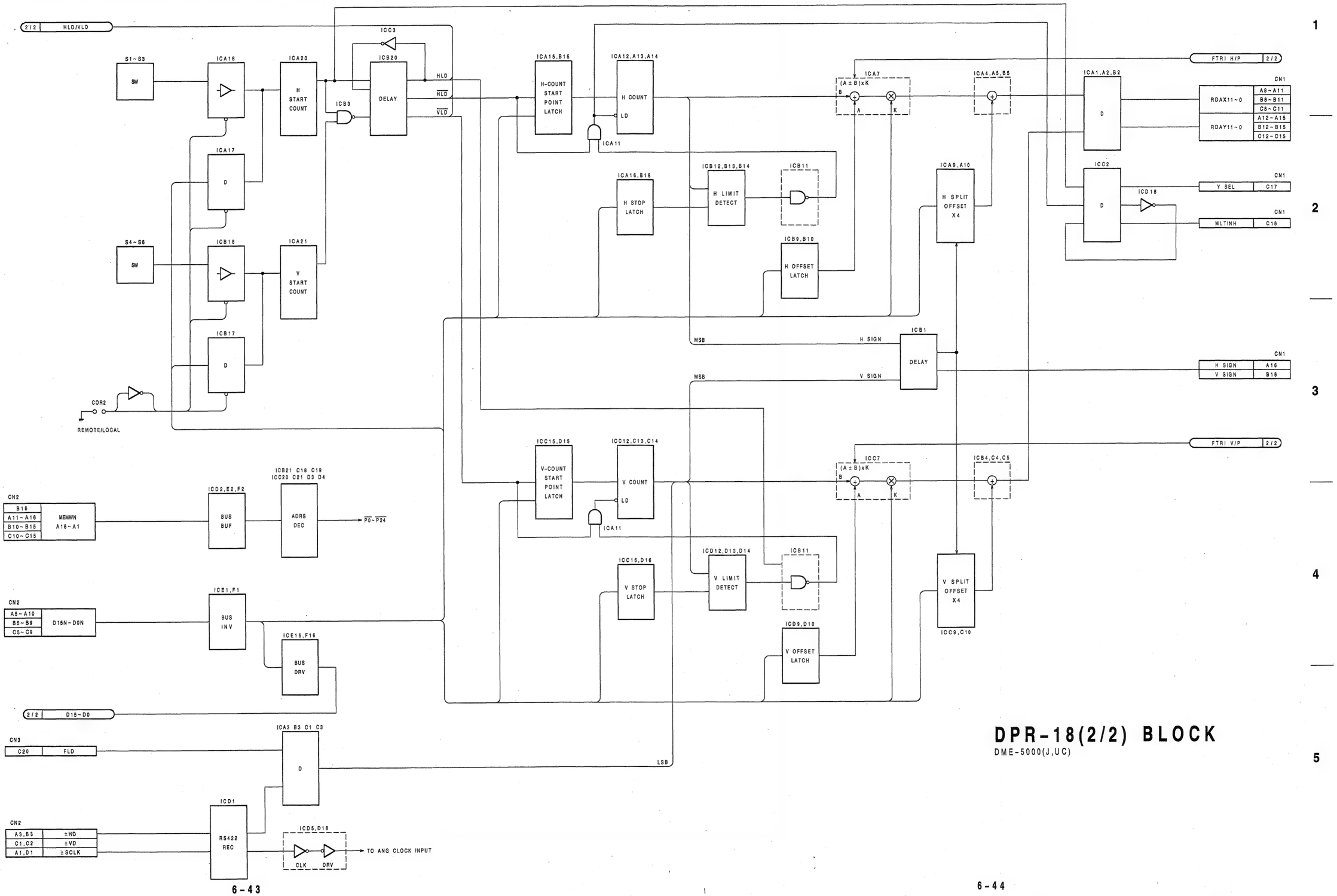

DPR-18(2/2) BLOCK

DME-5000(J,UC)

3 FIELD VIDEO MEMORY AND INTERPOLATOR

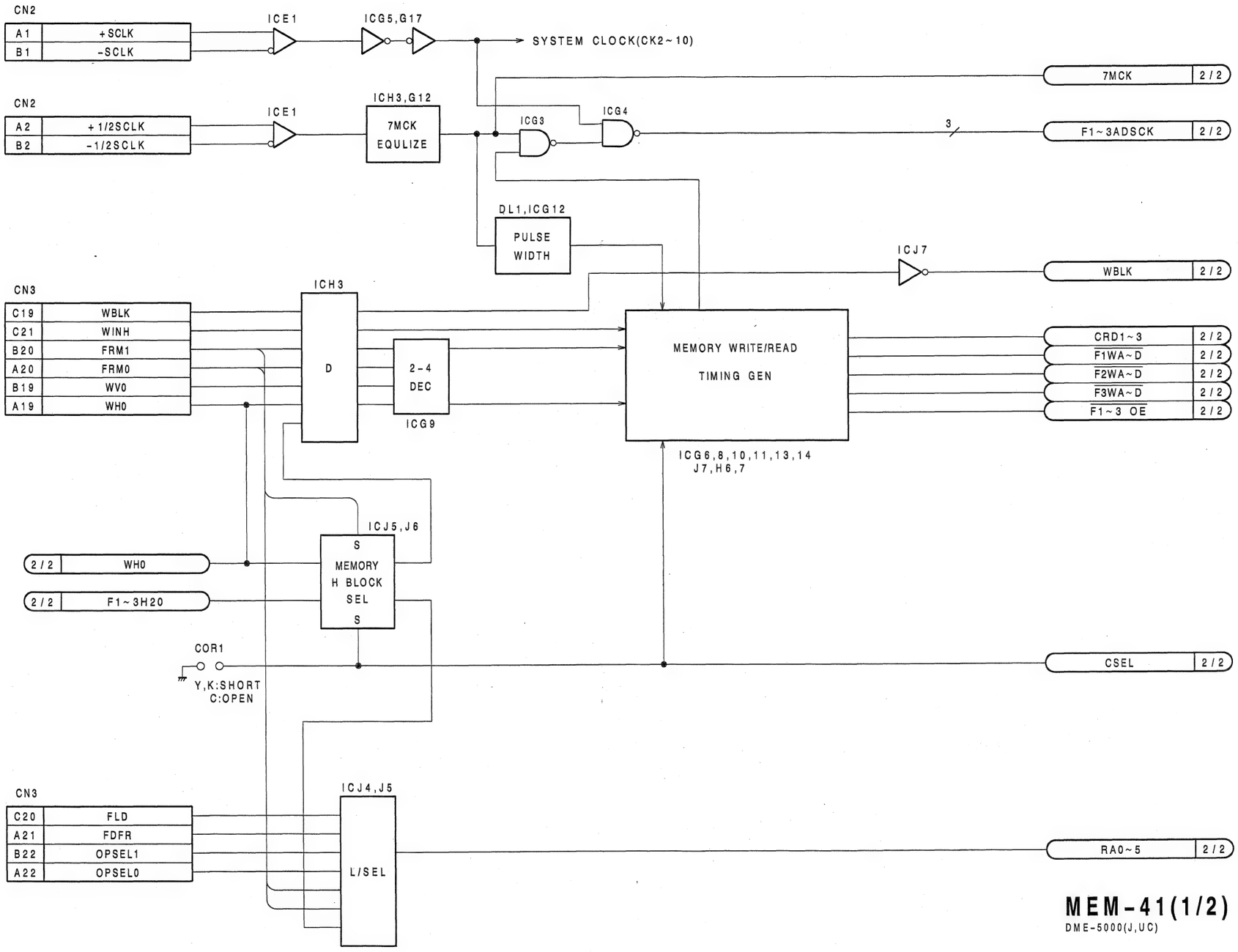

MEM-41(1/2) BLOCK

DME-5000(J,UC)

SECTION 7
SEMICONDUCTOR ELECTRODES

ここに記載されているIC, トランジスタ, ダイオードは, それぞれの機能を等価的に表したものです。したがって互換性を表すものではありません。(互換性のない型名が併記されている事もあります。) 部品の交換をする時は, SPARE PARTSの章を参照して下さい。

ICs, transistors and diodes whoses functions are equivalent are described here. Therefore, incompatible device names may de described together. For parts replacement, refer to the Spare Parts section in this manual.

TYPE	PAGE
<IC>	
74AC02PC	7-2
74AC08PC	7-2
74AC109PC	7-2
74AC245PC	7-2
74AC32PC	7-2
74AC373PC	7-2
74AC74PC	7-3
74ACT244PC	7-3
74ACT245PC	7-2
74ACT373PC	7-2
74F00PC	7-3
74F02PC	7-3
74F04PC	7-3
74F08PC	7-3
74F10PC	7-3
74F139PC	7-4
74F148PC	7-4
74F153PC	7-4
74F157APC	7-4
74F158APC	7-4
74F163APC	7-5
74F164PC	7-5
74F175PC	7-5
74F20PC	7-5
74F240PC	7-5
74F283PC	7-6
74F32PC	7-6
74F350PC	7-6
74F374PC	7-6
74F379PC	7-6
74F382PC	7-6
74F398PC	7-7
74F399PC	7-7
74F534PC	7-7
74F574PC	7-7
74F64PC	7-7
74F74PC	7-8
74F86PC	7-8
A80386DX-16	7-9
A80387DX-16	7-10
AM26LS30PC	7-8
AM26LS32ACN	7-8
AT27HC642-55DC	7-8
AT27HC642-55PC	7-8
CX20160	7-10
CX23024	7-11
CX23043	7-11
CXD8040G	7-12
CXD8156Q	7-13
CXD8157Q	7-14
CXD8158Q	7-15
CXK1206M	7-16
CXK54256P-45	7-11
CXK581000P-10L	7-17
CXK5814P-35	7-12
CXK58257P-10LL	7-16
CXK58258SP-35	7-17
CXQ70116P-8	7-18
CXQ71011P	7-19
CXQ71059P	7-19
CY7C291L-35PC	7-20
EPM5016-1	7-17
GAL16V8A-10LP	7-18
HM63021P-28	7-20
HN58C65P-25	7-21
L29C520PC	7-21
LSP001AC-Q	7-22
LT1171CT	7-21
MAX232CPE	7-22
MAX691CPE	7-22
MB7112L	7-21
MB8421-90LP	7-23
MB8431-90LP	7-23
MBM28C64-25	7-24
N74F85N	7-24
PEEL18CV8-25	7-24
PEEL18CV8P-35	7-24
SM5828P	7-25
SN74ALS00AN	7-3
SN74ALS04BN	7-3
SN74ALS08N	7-3
SN74ALS138N	7-24
SN74ALS153N	7-4
SN74ALS157AN	7-4
SN74ALS158N	7-4
SN74ALS161BN	7-25
SN74ALS163BN	7-5
SN74ALS175N	7-5
SN74ALS240AN	7-5
SN74ALS244BN	7-26
SN74ALS273N	7-26
SN74ALS27N	7-24
SN74ALS30AN	7-26
SN74ALS32N	7-6
SN74ALS374N	7-6
SN74ALS541N	7-26
SN74ALS564AN	7-26
SN74ALS574AN	7-7
SN74ALS575ANT	7-27
SN74ALS640AN	7-27
SN74ALS645AN	7-27
SN74ALS688N	7-27
SN74ALS74AN	7-8
SN74ALS86N	7-8
SN74ALS874NT	7-28
SN74HC02N	7-2
SN74HC04N	7-28
SN74HC08N	7-2
SN74HC109N	7-2
SN74HC10N	7-28
SN74HC132N	7-28
SN74HC133N	7-28
SN74HC138N	7-28
SN74HC14N	7-28
SN74HC174N	7-29
SN74HC240N	7-29
SN74HC244N	7-3
SN74HC245N	7-2
SN74HC273N	7-29
SN74HC32N	7-2
SN74HC374N	7-29
SN74HC4024N	7-29
SN74HC574N	7-29
SN74HC688N	7-30
SN74HC74N	7-3
SN74HCT240N	7-29
SN74HCT244N	7-3
SN74HCT374N	7-29
SN74LS125AN	7-30
SN74LS164N	7-5
SN74LS283N	7-6
SN74LS640N	7-27
SN74LS682N	7-30
TC74ACT04P	7-28
TC74HCT04AP	7-28
TD62083AP	7-30
TMC2111B2C	7-30
TMS27C256-15JL	7-31
TMS27C512-20JL	7-31
uPD42101C-3	7-31
uPD71051C-10	7-32
uPD71054C-10	7-32
uPD72001C	7-33
V74ACT821PS	7-34
V74ACT827PS	7-34
WS27C010L-12D	7-35
WS57C291B-45S	7-34
WS57C291B-45T	7-34
<Diode>	
1SS119	7-35
S3S4M	7-35
SLR-320VC3	7-35
TLG123A	7-35
<Transistor>	
2SA952	7-35

74AC02PC (NS)
SN74HC02N (TI)

C-MOS QUAD 2-INPUT NOR GATE
– TOP VIEW –

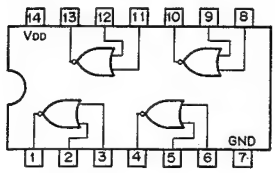

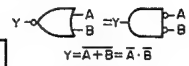

$Y=\overline{A+B}=\overline{A}\cdot\overline{B}$

A	B	Y
0	0	1
0	1	0
1	0	0
1	1	0

0; LOW LEVEL
1; HIGH LEVEL

NOTE :

TYPE	VDD
TC74AC02F	+2 to +5.5V
OTHER TYPES	+2 to +6V

74AC08PC (NS)
SN74HC08N (TI)

C-MOS QUAD 2-INPUT AND GATE
– TOP VIEW –

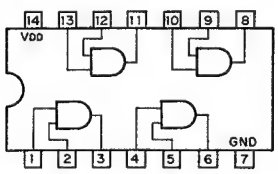

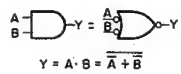

$Y=A\cdot B=\overline{\overline{A}+\overline{B}}$

A	B	Y
0	0	0
0	1	0
1	0	0
1	1	1

0; LOW LEVEL
1; HIGH LEVEL

NOTE :

TYPE	VDD
TC74AC08F	+2 to +5.5V
OTHER TYPES	+2 to +6V

74AC109PC (NS)
SN74HC109N (TI)

C-MOS J-K FLIP-FLOP WITH DIRECT SET/RESET
– TOP VIEW –

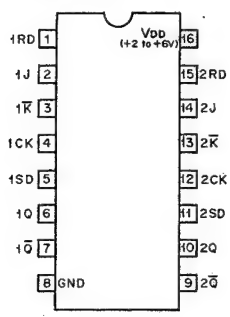

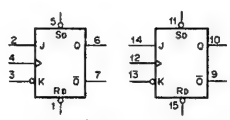

INPUTS					OUTPUTS	
SD	RD	CK	J	K	Qn+1	Qn+1
0	1	X	X	X	1	0
1	0	X	X	X	0	1
0	0	X	X	X	1*	1*
1	1	↓	0	1	Qn	Qn
			0	0	0	1
			1	1	1	0
			1	0	Qn	Qn
1	1	0	X	X	Qn	Qn

0; LOW LEVEL
1; HIGH LEVEL
X; DON'T CARE
*; NONSTABLE

74AC245PC (NS)
74ACT245PC (NS)
SN74HC245N (TI)

C-MOS BILATERAL BUS TRANSCEIVERS WITH 3-STATE OUTPUTS
– TOP VIEW –

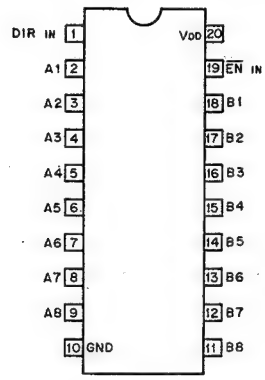

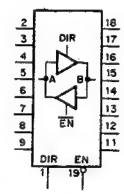

EN	DIR	OPERATION
0	0	B to A
0	1	A to B
1	X	HI ~ Z

0; LOW LEVEL
1; HIGH LEVEL
X; DON'T CARE
HI-Z; HIGH IMPEDANCE

NOTE :

TYPE	VDD
AC HC	+2 to +6V
ACT HCT	+5V
TC74AC245F TC74AC245P	+2 to +5.5V

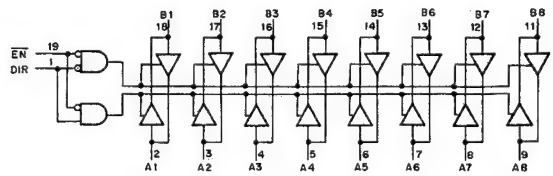

74AC32PC (NS)
SN74HC32N (TI)

C-MOS 2-INPUT OR GATE
– TOP VIEW –

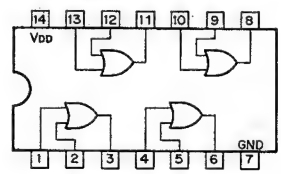

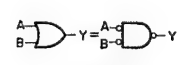

$Y=A+B=\overline{\overline{A}\cdot\overline{B}}$

A	B	Y
0	0	0
0	1	1
1	0	1
1	1	1

0; LOW LEVEL
1; HIGH LEVEL

NOTE :

TYPE	VDD
TC74AC32F	+2 to +5.5V
OTHER TYPES	+2 to +6V

74AC373PC (NS) (V_{DD} = + 2 to + 6V)
74ACT373PC (NS) (V_{DD} = + 5V)

C-MOS 3-STATE OUTPUTS OCTAL LATCHES
– TOP VIEW –

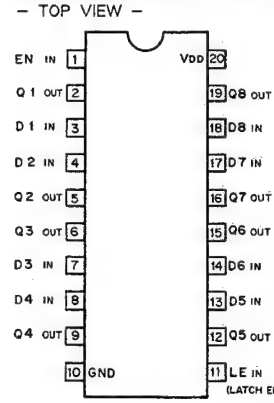

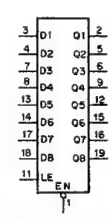

INPUTS			OUT
EN	D	LE	Q
0	1	1	1
0	0	1	0
0	X	0	Qo
1	X	X	HI-Z

HI-Z; HIGH IMPEDANCE
0; LOW LEVEL
1; HIGH LEVEL
X; DON'T CARE

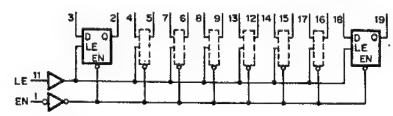

74AC74PC (NS)
SN74HC74N (TI)

C-MOS D-TYPE FLIP FLOP WITH DIRECT SET/RESET
– TOP VIEW –

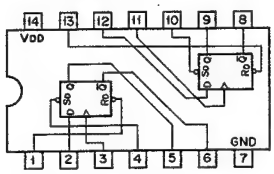

INPUTS				OUTPUTS	
$\overline{Sd}$	$\overline{Rd}$	CK	D	Qn+1	$\overline{Qn+1}$
0	1	X	X	1	0
1	0	X	X	0	1
0	0	X	X	1	1
1	1	↑	1	1	0
1	1	↑	0	0	1
1	1	0	X	Qn	$\overline{Qn}$

0;LOW LEVEL
1;HIGH LEVEL
X;DON'T CARE

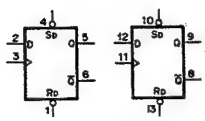

NOTE :

TYPE	VDD
74ACT	+5V
TC74AC74F	+2 to +5.5V
TC74ACT74F	+4.5 to +5.5V
OTHER TYPES	+2 to +6V

74ACT244PC (NS)
SN74HC244N (TI)
SN74HCT244N (TI)

C-MOS BUS BUFFER WITH 3-STATE OUTPUTS
– TOP VIEW –

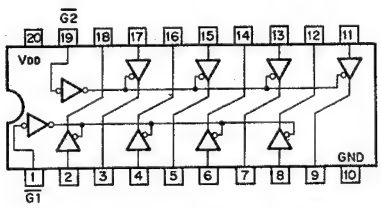

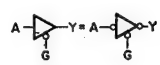

G	A	Y
0	0	0
0	1	1
1	X	HI-Z

0;LOW LEVEL
1;HIGH LEVEL
X;DON'T CARE
HI-Z;HIGH IMPEDANCE

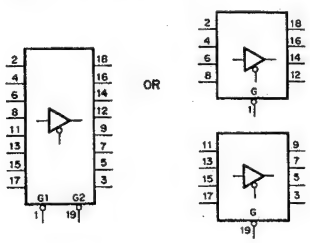

NOTE :

TYPE	VDD
AC HC 40H	+2 to +6V
ACT HCT	+5V

74F00PC (NS)
SN74ALS00AN (TI)

TTL 2-INPUT POSITIVE-NAND GATE
– TOP VIEW –

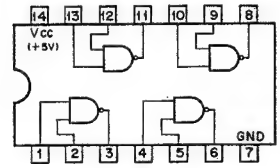

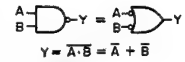

A	B	Y
0	0	1
0	1	1
1	0	1
1	1	0

0;LOW LEVEL
1;HIGH LEVEL

74F02PC (NS)

TTL 2-INPUT POSITIVE-NOR GATE
– TOP VIEW –

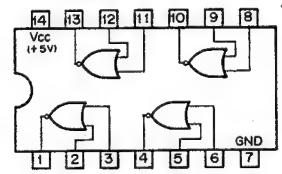

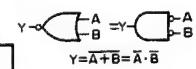

A	B	Y
0	0	1
0	1	0
1	0	0
1	1	0

0;LOW LEVEL
1;HIGH LEVEL

74F04PC (NS)
SN74ALS04BN (TI)

TTL INVERTER
– TOP VIEW –

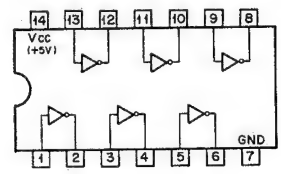

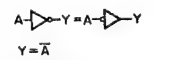

A	Y
0	1
1	0

0;LOW LEVEL
1;HIGH LEVEL

74F08PC (NS)
SN74ALS08N (TI)

TTL 2-INPUT POSITIVE-AND GATE
– TOP VIEW –

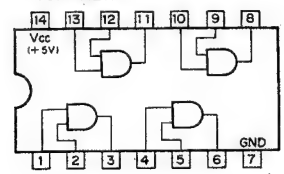

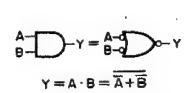

A	B	Y
0	0	0
0	1	0
1	0	0
1	1	1

0;LOW LEVEL
1;HIGH LEVEL

74F10PC (NS)

TTL 3-INPUT POSITIVE NAND GATE
– TOP VIEW –

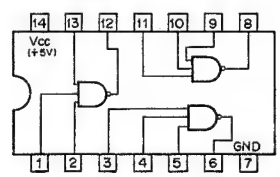

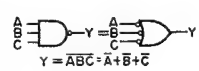

A	B	C	Y
0	0	0	1
0	0	1	1
0	1	0	1
0	1	1	1
1	0	0	1
1	0	1	1
1	1	0	1
1	1	1	0

0 : LOW LEVEL
1 : HIGH LEVEL

74F139PC (NS)

TTL 2-TO-4-LINE DECODER/DEMULTIPLEXER
– TOP VIEW –

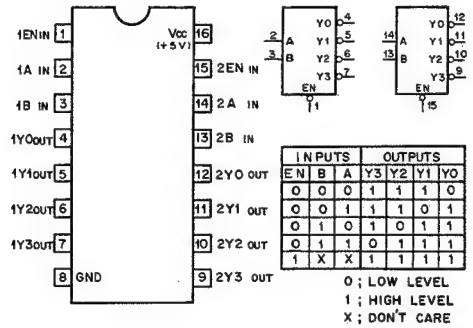

INPUTS			OUTPUTS			
EN	B	A	Y3	Y2	Y1	YO
0	0	0	1	1	1	0
0	0	1	1	1	0	1
0	1	0	1	0	1	1
0	1	1	0	1	1	1
1	X	X	1	1	1	1

0 ; LOW LEVEL
1 ; HIGH LEVEL
X ; DON'T CARE

74F148PC (NS)

TTL 8-TO-3-LINE PRIORITY ENCODER
– TOP VIEW –

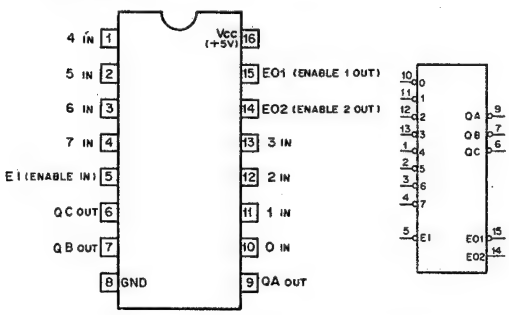

INPUTS									OUTPUTS				
EI	7	6	5	4	3	2	1	0	QC	QB	QA	EO1	EO2
1	X	X	X	X	X	X	X	X	1	1	1	1	1
0	1	1	1	1	1	1	1	1	1	1	1	0	1
0	1	1	1	1	1	1	1	0	1	1	1	1	0
0	1	1	1	1	1	1	0	X	1	1	0	1	0
0	1	1	1	1	1	0	X	X	1	0	1	1	0
0	1	1	1	1	0	X	X	X	1	0	0	1	0
0	1	1	1	0	X	X	X	X	0	1	1	1	0
0	1	1	0	X	X	X	X	X	0	1	0	1	0
0	1	0	X	X	X	X	X	X	0	0	1	1	0
0	0	X	X	X	X	X	X	X	0	0	0	1	0

0;LOW LEVEL 1;HIGH LEVEL X;DON'T CARE

74F153PC (NS)
SN74ALS153N (TI)

TTL 4-LINE-TO-1-LINE DATA SELECTOR/MULTIPLEXER
– TOP VIEW –

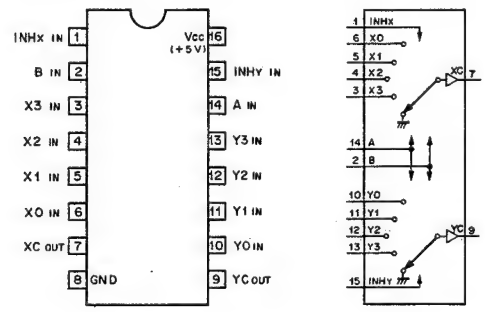

CONTROL IN			ON CHANNEL
INH	B	A	
0	0	0	0
0	0	1	1
0	1	0	2
0	1	1	3
1	X	X	GND

0;LOW LEVEL
1;HIGH LEVEL
X;DON'T CARE

74F157APC (NS)
SN74ALS157AN (TI)

TTL 2-LINE-TO-1-LINE DATA SELECTOR/MULTIPLEXER
– TOP VIEW –

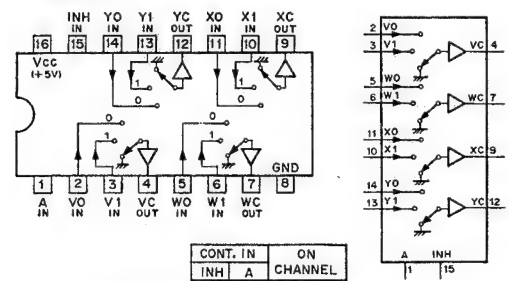

CONT. IN		ON CHANNEL
INH	A	
0	0	0
0	1	1
1	X	GND

0;LOW LEVEL
1;HIGH LEVEL
X;DON'T CARE

74F158APC (NS)
SN74ALS158N (TI)

TTL 2-LINE-TO-1-LINE INVERTED DATA SELECTOR/MULTIPLEXER
– TOP VIEW –

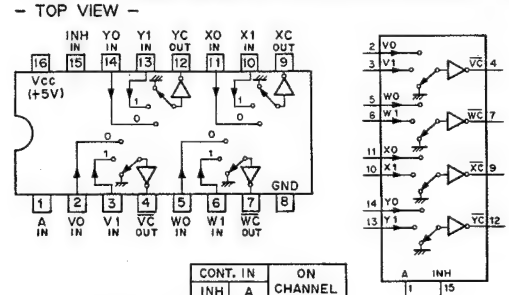

CONT. IN		ON CHANNEL
INH	A	
0	0	0
0	1	1
1	X	GND

0;LOW LEVEL
1;HIGH LEVEL
X;DON'T CARE

74F163APC (NS)
SN74ALS163BN (TI)

TTL PRESETTABLE SYNCHRONOUS 4-BIT BINARY COUNTER
– TOP VIEW –

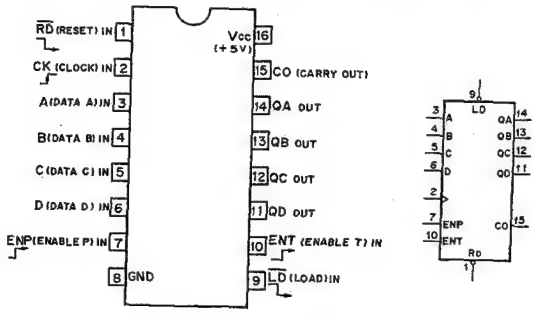

MODE SELECTION

CONTROL INPUTS				MODE
RD	LD	ENP	ENT	
0	X	X	X	RESET (SYNCHRONOUS)
1	0	X	X	PRESET (SYNCHRONOUS)
1	1	0	X	NO COUNT
1	1	X	0	NO COUNT
1	1	1	1	COUNT

0;LOW LEVEL
1;HIGH LEVEL
X;DON'T CARE

COUNT SEQUENCE

COUNT	OUTPUTS			
	QD	QC	QB	QA
0	0	0	0	0
1	0	0	0	1
2	0	0	1	0
3	0	0	1	1
4	0	1	0	0
5	0	1	0	1
6	0	1	1	0
7	0	1	1	1
8	1	0	0	0
9	1	0	0	1
10	1	0	1	0
11	1	0	1	1
12	1	1	0	0
13	1	1	0	1
14	1	1	1	0
15	1	1	1	1

CARRY OUTPUT "CO"

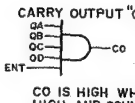

CO IS HIGH WHEN ENT INPUT IS HIGH AND COUNT IS "15".

74F175PC (NS)
SN74ALS175N (TI)

TTL D-TYPE FLIP-FLOP WITH CLEAR
– TOP VIEW –

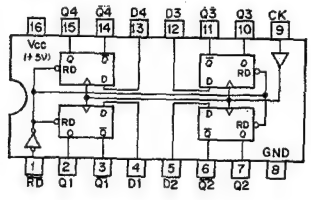

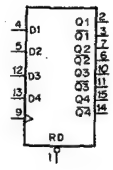

RD	CK	D	Q	$\overline{Q}$
0	X	X	0	1
1	↑	1	1	0
1	↑	0	0	1
1	0	X	Qo	$\overline{Q_o}$

0;LOW LEVEL
1;HIGH LEVEL
X;DON'T CARE

74F20PC (NS)

TTL 4-INPUT POSITIVE NAND GATE
– TOP VIEW –

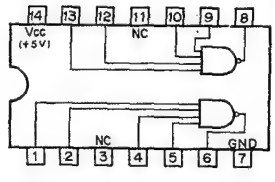

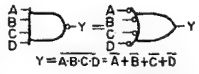

A	B	C	D	Y
0	0	0	0	1
0	0	0	1	1
0	0	1	0	1
0	0	1	1	1
0	1	0	0	1
:	:	:	:	:
1	1	0	1	1
1	1	1	0	1
1	1	1	1	0

0;LOW LEVEL
1;HIGH LEVEL

74F164PC (NS)
SN74LS164N (TI)

TTL 8-BIT PARALLEL-OUT SERIAL SHIFT REGISTER
– TOP VIEW –

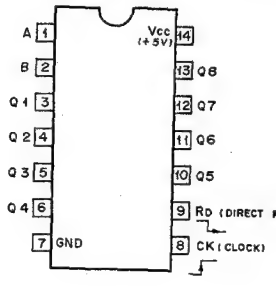

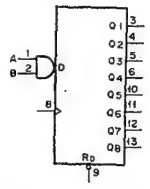

INPUTS				OUTPUTS			
RD	CK	A	B	Q1	Q2	----	Q8
0	X	X	X	0	0	0	0
1	0	X	X	Q1o	Q2o	----	Q8o
1	↑	1	1	1	Q1n	----	Q7n
1	↑	0	X	0	Q1n	----	Q7n
1	↑	X	0	0	Q1n	----	Q7n

0;LOW LEVEL
1;HIGH LEVEL
X;DON'T CARE

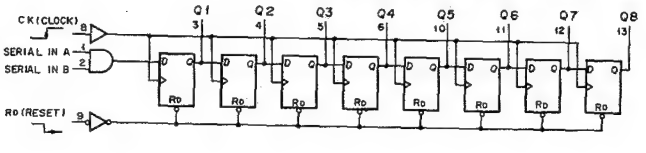

74F240PC (NS)
SN74ALS240AN (TI)

TTL 3-STATE SCHMITT TRIGGER INVERTER/LINE DRIVER
– TOP VIEW –

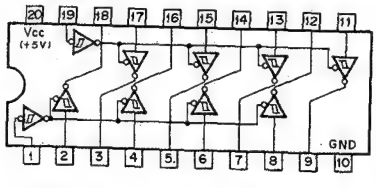

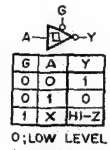

G	A	Y
0	0	1
0	1	0
1	X	HI-Z

0;LOW LEVEL
1;HIGH LEVEL
X;DON'T CARE
HI-Z;HIGH IMPEDANCE

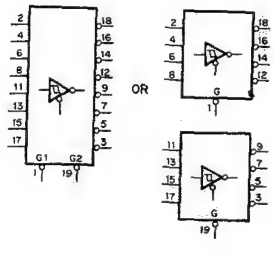

74F283PC (NS)
SN74LS283N (TI)

TTL 4-BIT BINARY FULL ADDER
– TOP VIEW –

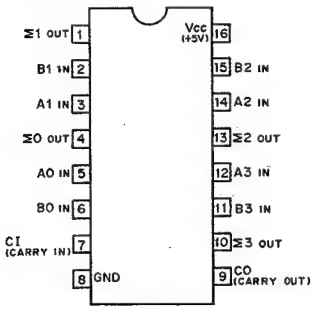

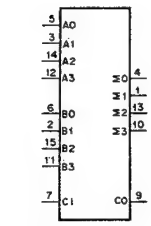

	2^4	2^3	2^2	2^1	2^0	
					CI	CARRY IN
	A3	A2	A1	A0		DATA A IN
+	B3	B2	B1	B0		DATA B IN
	CO	Σ3	Σ2	Σ1	Σ0	CARRY&SUM OUT

EX.					
				1	CI
	1	0	1	1	A
+	1	0	1	0	B
	1	0	1	1	0	OUTPUTS
	CO	Σ3	Σ2	Σ1	Σ0	

74F32PC (NS)
SN74ALS32N (TI)

TTL 2-INPUT POSITIVE-OR GATE
– TOP VIEW –

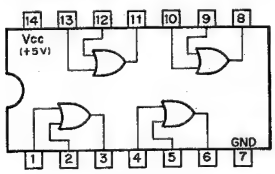

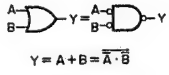

A	B	Y
0	0	0
0	1	1
1	0	1
1	1	1

0;LOW LEVEL
1;HIGH LEVEL

74F350PC (NS)

4-BIT SHIFTER WITH 3-STATE OUTPUTS
– TOP VIEW –

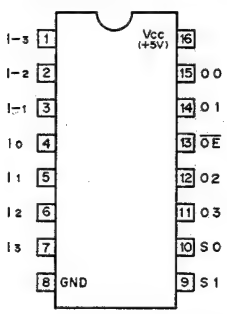

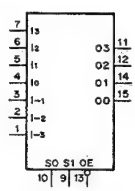

I-3～I3 ; DATA INPUTS
O0～O3 ; 3-STATE OUTPUTS
$\overline{OE}$; OUTPUT ENABLE INPUT
S0,S1 ; SELECT INPUTS

Inputs			Outputs			
$\overline{OE}$	S1	S0	O0	O1	O2	O3
1	X	X	HI-Z	HI-Z	HI-Z	HI-Z
0	0	0	I0	I1	I2	I3
0	0	1	I1	I0	I1	I2
0	1	0	I2	I1	I0	I1
0	1	1	I3	I2	I1	I0

1 ; HIGH LEVEL
0 ; LOW LEVEL
X ; DON'T CARE
HI-Z ; HIGH IMPEDANCE

74F374PC (NS)
SN74ALS374N (TI)

TTL 3-STATE OUTPUTS OCTAL D-TYPE FLIP-FLOP
– TOP VIEW –

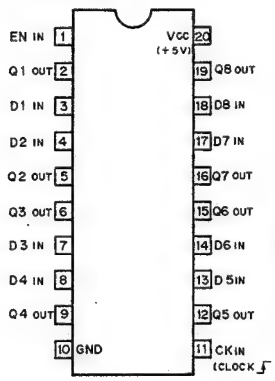

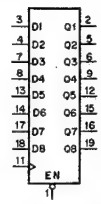

INPUTS			OUT
EN	D	CK	Q
0	1	↑	1
0	0	↑	0
0	X	0	Qo
1	X	X	HI-Z

0 ; LOW LEVEL
1 ; HIGH LEVEL
X ; DON'T CARE
HI-Z ; HIGH IMPEDANCE

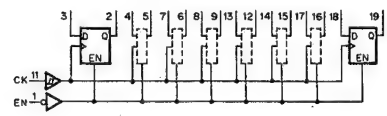

74F379PC (NS)

TTL QUAD D-TYPE FLIP-FLOP WITH ENABLE
– TOP VIEW –

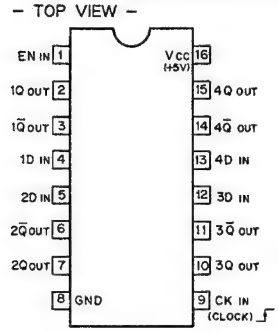

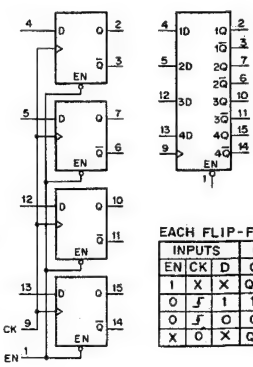

EACH FLIP-FLOP

INPUTS			OUT	
EN	CK	D	Q	$\overline{Q}$
1	X	X	Qo	$\overline{Qo}$
0	↓	1	1	0
0	↓	0	0	1
X	0	X	Qo	$\overline{Qo}$

74F382PC (NS)

TTL ARITHMETIC LOGIC UNIT
– TOP VIEW –

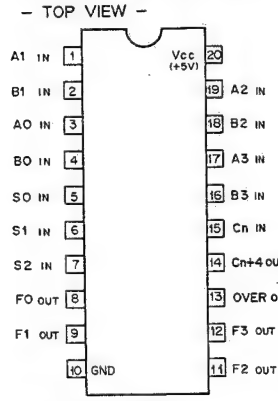

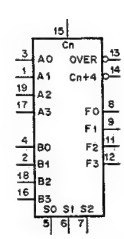

SELECTION			OPERATION	
S2	S1	S0		
0	0	0	CLEAR	
0	0	1	B MINUS A (SUBTRACTION)	
0	1	0	A MINUS B (〃 〃)	
0	1	1	A PLUS B (ADDITION)	
1	0	0	A⊕B	(EXCLUSIVE OR)
1	0	1	A+B	(OR)
1	1	0	AB	(AND)
1	1	1	PRESET	

A0-A3 ; WORD A INPUTS
B0-B3 ; WORD B INPUTS
S0-S2 ; FUNCTION SELECT INPUTS
Cn ; CARRY INPUT FOR ADDITION
INVERTED CARRY INPUT FOR SUBTRACTION
F0-F3 ; FUNCTION OUTPUTS
Cn+4 ; CARRY OUTPUT FOR PIPPLE EXPANSION
OVER ; OVERFLOW OUTPUT FOR TWOS COMPLEMENT ARITHMETIC

74F398PC (NS)

TTL QUAD 2-INPUT MULTIPLEXERS WITH STRAGE
– TOP VIEW –

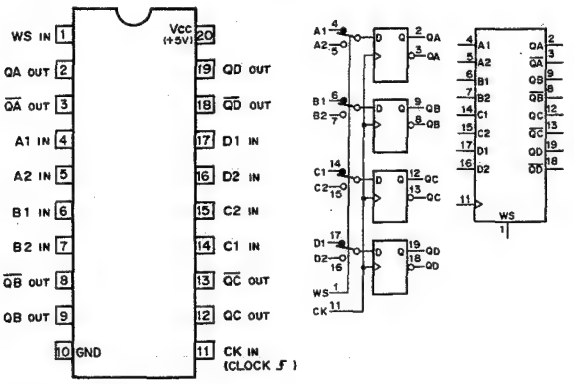

WS ; WORD SELECT

INPUTS		OUTPUTS			
WS	CK	QA	QB	QC	QD
0	↓	A1	B1	C1	D1
1	↓	A2	B2	C2	D2
X	0	QA0	QB0	QC0	QD0

1 ; HIGH LEVEL
0 ; LOW LEVEL
X ; DON'T CARE

74F399PC (NS)

TTL QUAD 2-INPUT MULTIPLEXERS WITH STORAGE
– TOP VIEW –

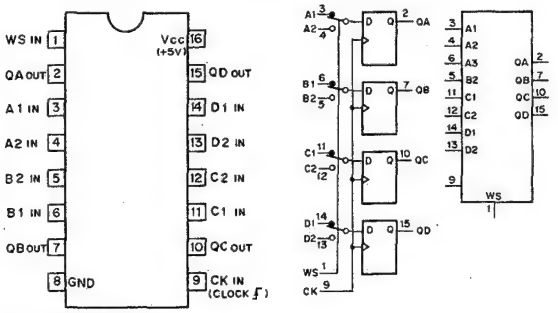

WS; WORD SELECT

INPUTS		OUTPUTS			
WS	CK	QA	QB	QC	QD
0	↓	A1	B1	C1	D1
1	↓	A2	B2	C2	D2
X	0	QA0	QB0	QC0	QD0

1 ; HIGH LEVEL
0 ; LOW LEVEL
X ; DON T CARE

74F534PC (NS)

TTL D-TYPE EDGE-TRIGGERED FLIP-FLOPS WITH 3-STATE OUTPUTS
– TOP VIEW –

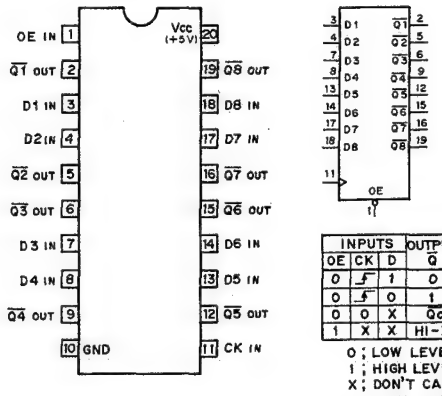

INPUTS			OUTPUT
OE	CK	D	$\overline{Q}$
0	↓	1	0
0	↓	0	1
0	0	X	$\overline{Q_0}$
1	X	X	HI-Z

0 ; LOW LEVEL
1 ; HIGH LEVEL
X ; DON'T CARE
HI-Z ; HIGH IMPEDANCE

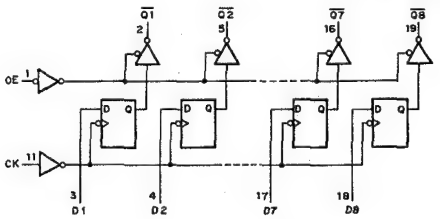

74F574PC (NS)
SN74ALS574AN (TI)

TTL 3-STATE D-TYPE EDGE-TRIGGERED FLIP-FLOP
– TOP VIEW –

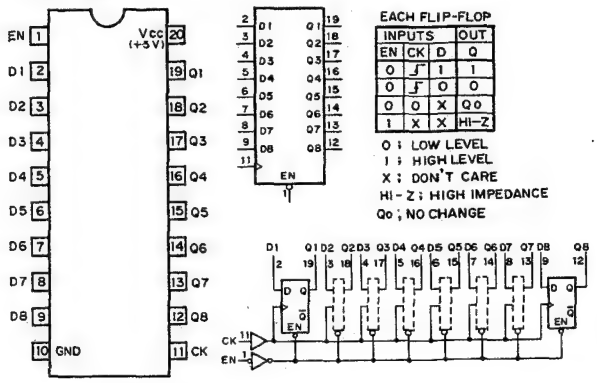

EACH FLIP-FLOP

INPUTS			OUT
EN	CK	D	Q
0	↓	1	1
0	↓	0	0
0	0	X	Q_0
1	X	X	HI-Z

0 ; LOW LEVEL
1 ; HIGH LEVEL
X ; DON'T CARE
HI-Z ; HIGH IMPEDANCE
Q_0 ; NO CHANGE

74F64PC (NS)

4-2-3-2 INPUT POSITIVE AND-OR-INVERT GATES
– TOP VIEW –

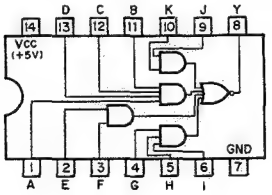

$Y = \overline{ABCD+EF+GHI+JK}$
$= (\bar{A}+\bar{B}+\bar{C}+\bar{D})(\bar{E}+\bar{F})(\bar{G}+\bar{H}+\bar{I})(\bar{J}+\bar{K})$

A	B	C	D	E	F	G	H	I	J	K	Y
1	1	1	1	X	X	X	X	X	X	X	0
X	X	X	X	1	1	X	X	X	X	X	0
X	X	X	X	X	X	1	1	1	X	X	0
X	X	X	X	X	X	X	X	X	1	1	0
0	X	X	X	0	X	0	X	X	0	X	1
X	0	X	X	X	0	X	0	X	X	0	1
X	X	0	X	0	X	X	X	0	0	X	1
X	X	X	0	0	X	0	X	X	0	X	1

0 ; LOW LEVEL
1 ; HIGH LEVEL
X ; DON'T CARE

74F74PC (NS)
SN74ALS74AN (TI)

TTL D-TYPE FLIP FLOP WITH DIRECT SET/RESET
– TOP VIEW –

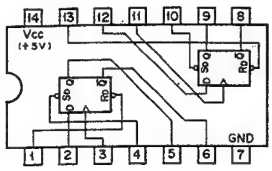

INPUTS				OUTPUTS	
$\overline{Sd}$	$\overline{Rd}$	CK	D	Qn+1	$\overline{Qn+1}$
0	1	X	X	1	0
1	0	X	X	0	1
0	0	X	X	1*	1*
1	1	↑	1	1	0
1	1	↑	0	0	1
1	1	0	X	Qn	$\overline{Qn}$

0; LOW LEVEL
1; HIGH LEVEL
X; DON'T CARE
1*; NONSTABLE

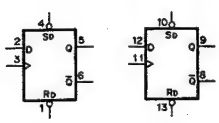

74F86PC (NS)
SN74ALS86N (TI)

TTL EXCLUSIVE OR GATE
– TOP VIEW –

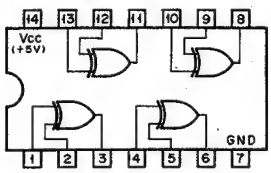

$Y = \overline{A} \cdot B + A \cdot \overline{B}$

A	B	Y
0	0	0
0	1	1
1	0	1
1	1	0

0; LOW LEVEL
1; HIGH LEVEL

AM26LS30PC (ADVANCED MICRO DEVICES)

LINE DRIVER
– TOP VIEW –

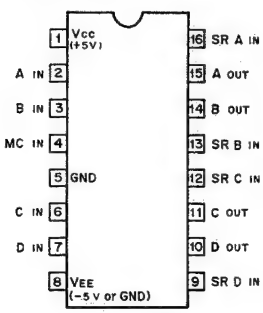

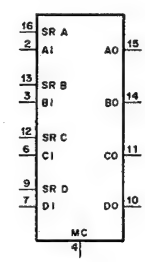

MC; MODE CONTROL
SR; SLEW RATE CONTROL

MC=1

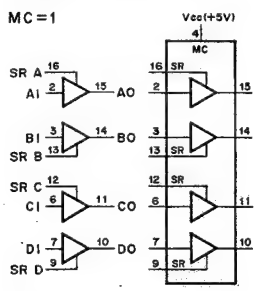

INPUTS		OUTPUTS	
MC	A TO D	A TO D	
1	0	0	
1	1	1	

0; LOW LEVEL
1; HIGH LEVEL

MC=0

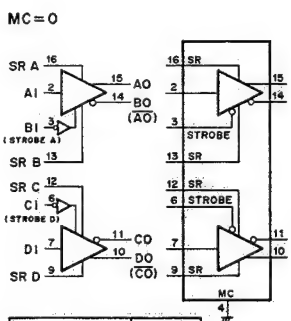

INPUTS			OUTPUTS	
MC	STROBE	A & D	A & D	B & C
0	0	0	0	1
0	0	1	1	0
0	1	X	HI-Z	HI-Z

X; DON'T CARE
HI-Z; HIGH IMPEDANCE

AM26LS32ACN (TI)

HIGH SPEED DIFFERENTIAL LINE RECEIVER
– TOP VIEW –

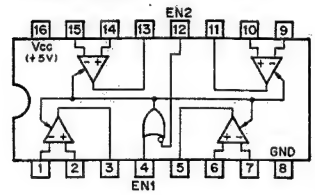

FUNCTION TABLE		
EN2	EN1	OUTPUT
0	0	ENABLE
0	1	ENABLE
1	0	HI-Z
1	1	ENABLE

0; LOW LEVEL
1; HIGH LEVEL
HI-Z; HIGH IMPEDANCE

	SENSE	INPUT VOLT
LS32	±200mV	±7V
LS33	±500mV	±15V

AT27HC642-55DC (ATMEL)
AT27HC642-55PC (ATMEL)

C-MOS 64K(8192x8)-BIT UV EPROM
– TOP VIEW –

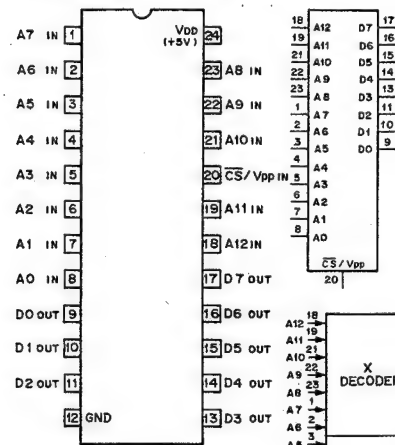

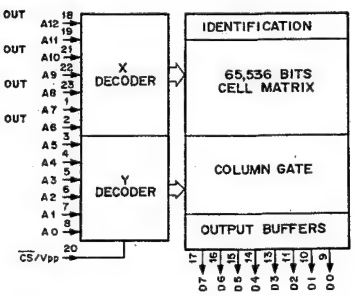

AO–A12; ADDRESS INPUTS
$\overline{CS}$/Vpp; CHIP SELECT INPUT
PROGRAM POWER
SUPPLY INPUT
DO–D7; DATA INPUT

A80386DX-16 (INTEL)

C-MOS 32-BIT MICROPROCESSOR

– BOTTOM VIEW –

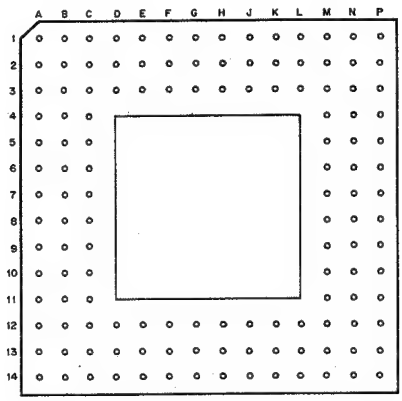

(V_{DD} = +5V)

PIN NO.	I/O	SYMBOL	PIN NO.	I/O	SYMBOL	PIN NO.	I/O	SYMBOL	PIN NO.	I/O	SYMBOL
A1	–	V_{DD}	C6	–	NC	H1	O	A17	M10	–	GND
A2	–	GND	C7	–	NC	H2	O	A18	M11	I/O	D15
A3	O	A3	C8	I	PEREQ	H3	O	A19	M12	I/O	D10
A4	–	NC	C9	I	RESET	H12	I/O	D0	M13	–	V_{DD}
A5	–	V_{DD}	C10	O	LOCK	H13	I/O	D1	M14	O	HLDA
A6	–	GND	C11	–	GND	H14	I/O	D2	N1	O	A27
A7	–	V_{DD}	C12	–	V_{DD}	J1	O	A20	N2	O	A31
A8	I	ERROR	C13	O	BE1	J2	–	GND	N3	–	GND
A9	–	GND	C14	I	BS16	J3	–	GND	N4	–	V_{DD}
A10	–	V_{DD}	D1	O	A11	J12	–	GND	N5	I/O	D27
A11	O	D/$\overline{C}$	D2	O	A10	J13	–	GND	N6	I/O	D25
A12	O	M/$\overline{IO}$	D3	O	A9	J14	I/O	D3	N7	–	V_{DD}
A13	O	BE3	D12	–	V_{DD}	K1	O	A21	N8	I/O	D23
A14	–	V_{DD}	D13	O	NA	K2	O	A22	N9	I/O	D21
B1	–	GND	D14	I	HOLD	K3	O	A25	N10	I/O	D17
B2	O	A5	E1	O	A14	K12	I/O	D7	N11	I/O	D16
B3	O	A4	E2	O	A13	K13	I/O	D5	N12	I/O	D12
B4	–	NC	E3	O	A12	K14	I/O	D4	N13	I/O	D11
B5	–	GND	E12	O	BE0	L1	O	A23	N14	I/O	D9
B6	–	NC	E13	–	NC	L2	O	A24	P1	O	A30
B7	I	INTR	E14	O	ADS	L3	O	A28	P2	–	V_{DD}
B8	I	NMI	F1	O	A15	L12	–	V_{DD}	P3	I/O	D30
B9	I	BUSY	F2	–	GND	L13	I/O	D8	P4	I/O	D29
B10	O	W/$\overline{R}$	F3	–	GND	L14	I/O	D6	P5	I/O	D26
B11	–	GND	F12	I	CLK2	M1	O	A26	P6	–	GND
B12	–	NC	F13	–	NC	M2	O	A29	P7	I/O	D24
B13	O	BE2	F14	–	GND	M3	–	V_{DD}	P8	–	V_{DD}
B14	–	GND	G1	O	A16	M4	–	GND	P9	I/O	D22
C1	O	A8	G2	–	V_{DD}	M5	I/O	D31	P10	I/O	D19
C2	O	A7	G3	–	V_{DD}	M6	I/O	D28	P11	I/O	D18
C3	O	A6	G12	–	V_{DD}	M7	–	V_{DD}	P12	I/O	D14
C4	O	A2	G13	I	READY	M8	–	GND	P13	I/O	D13
C5	–	V_{DD}	G14	–	V_{DD}	M9	I/O	D20	P14	–	GND

INPUT

BS16	; BUS SIZE 16 (H : 32-BIT, L : 16-BIT DATA BUS)
BUSY	; COPROCESSOR BUSY
CLK2	; CLOCK
ERROR	; COPROCESSOR ERROR
HOLD	; BUS HOLD REQUEST
INTR	; MASKABLE INTERRUPT REQUEST
NA	; NEXT ADDRESS REQUEST
NMI	; NON-MASKABLE INTERRUPT REQUEST
PEREQ	; PROCESSOR EXTENSION REQUEST
READY	; TRANSFER ACKNOWLEDGE
RESET	; RESET

OUTPUT

A2 – A31	; ADDRESS BUS
ADS	; ADDRESS STATUS
BE0 – BE3	; BYTE ENABLES
D/$\overline{C}$	; DATA-CONTROL INDICATION
HLDA	; BUS HOLD ACKNOWLEDGE
LOCK	; BUS LOCK INDICATION
M/$\overline{IO}$	; MEMORY-I/O INDICATION
W/$\overline{R}$	; WRITE-READ INDICATION

INPUT/OUTPUT

D0 – D31	; DATA BUS

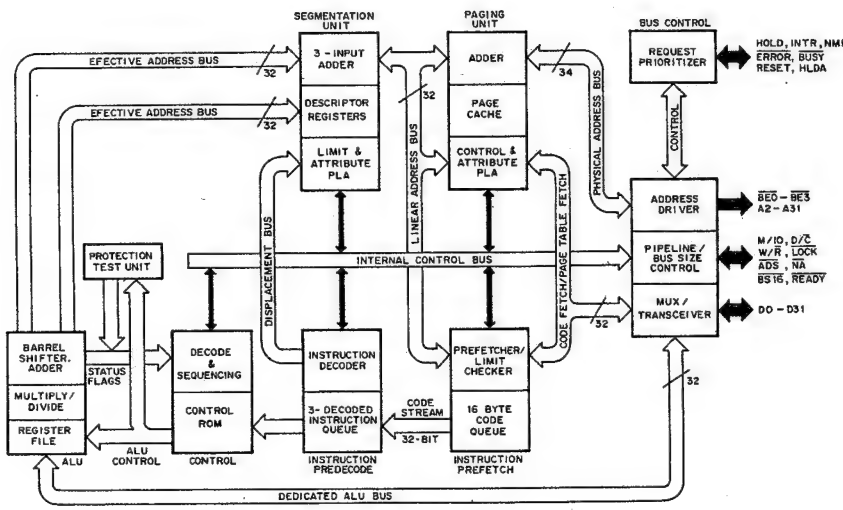

A80387DX-16 (INTEL)

NUMERICS COPROCESSOR
– BOTTOM VIEW –

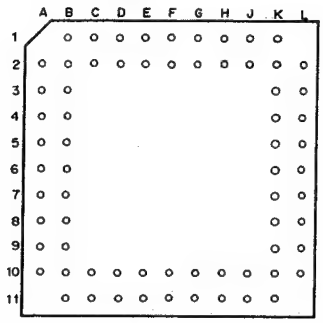

$V_{DD} = +5V$

PIN No.	I/O	SIGNAL	PIN No.	I/O	SIGNAL	PIN No.	I/O	SIGNAL	PIN No.	I/O	SIGNAL
1B	I/O	D8	2H	I/O	D0	6K	I	NPS2	10C	I/O	D23
1C	I/O	D7	2L	O	ERROR	6L	I	NPS1	10D	I/O	D24
1D	I/O	D5	3A	I/O	D11	7A	I/O	D16	10E	I/O	D26
1E	–	V_{DD}	3B	I/O	D10	7B	–	GND	10F	–	V_{DD}
1F	–	V_{DD}	3K	–	V_{DD}	7K	I	ADS	10G	I/O	D28
1G	I/O	D3	3L	O	READY O	7L	–	V_{DD}	10H	I/O	D30
1H	I/O	D1	4A	I/O	D12	8A	I/O	D18	10L	I	RESET IN
1J	–	GND	4B	–	V_{DD}	8B	I/O	D17	11B	I/O	D22
1K	O	PEREQ	4K	I	W/R	8K	I	READY	11C	–	GND
2A	I/O	D9	4L	I	STEN	8L	I	CMD0	11D	I/O	D25
2B	–	GND	5A	I/O	D14	9A	–	V_{DD}	11E	I/O	D27
2C	I/O	D6	5B	I/O	D13	9B	I/O	D19	11F	–	GND
2D	I/O	D4	5K	–	V_{DD}	9K	–	NC	11G	I/O	D29
2E	–	GND	5L	–	GND	9L	–	V_{DD}	11H	I/O	D31
2F	–	GND	6A	–	V_{DD}	10A	I/O	D21	11J	I	CKM
2G	I/O	D2	6B	I/O	D15	10B	I/O	D20	11K	I	NUMCLK2

CX20160 (SONY)

TTL OCTAL 3 OR 4 STAGE SHIFT REGISTER
– TOP VIEW –

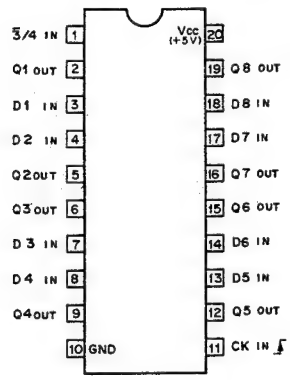

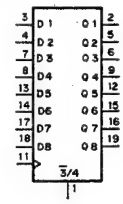

3/4; TOTAL STAGE SELECTION SIGNAL INPUT
H: 4 STAGES, L: 3 STAGES

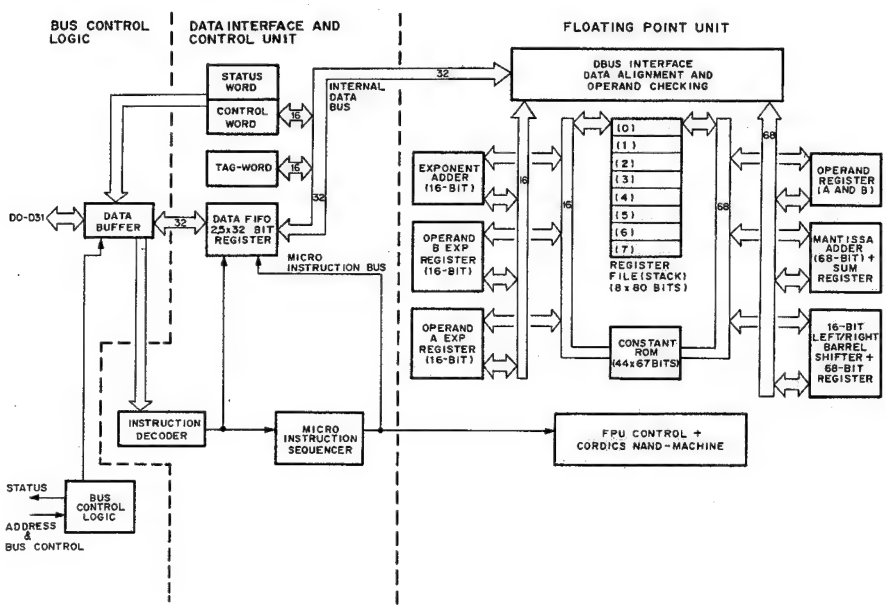

CX23024 (SONY)

N-MOS 8-BIT SERIAL TO/FROM PARALLEL SHIFT REGISTER
– TOP VIEW –

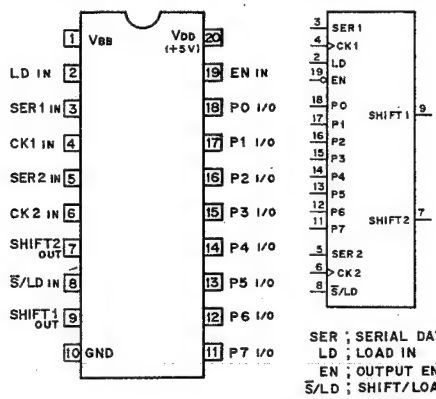

SER ; SERIAL DATA IN
LD ; LOAD IN
EN ; OUTPUT ENABLE IN
S/LD ; SHIFT/LOAD CONTROL IN
SHIFT ; SERIAL SHIFT DATA OUT
P0–P7 ; PARALLEL DATA IN/OUT

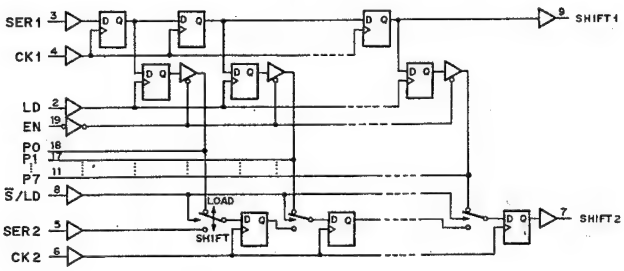

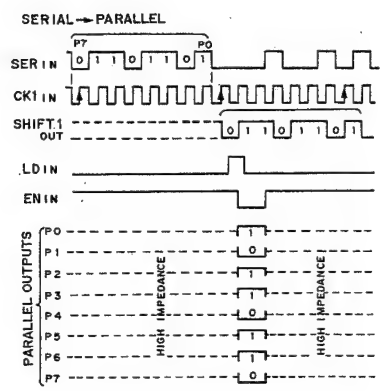

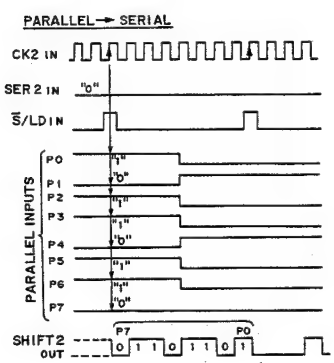

CX23043 (SONY)

N-MOS SYNCHRONOUS 10-BIT BINARY COUNTER
– TOP VIEW –

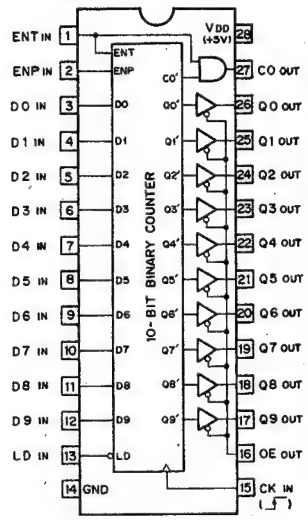

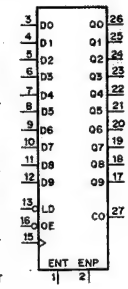

ENT	ENP	LD	FUNCTION
1	1	1	COUNT
0	X	1	NO COUNT
X	0	1	NO COUNT
X	X	0	LOAD

OE	Q0 to Q9 OUTPUT
0	Q0' to Q9'
1	HI-IMPEDANCE

0; LOW LEVEL
1; HIGH LEVEL
X; DON'T CARE

Q0 to Q9; OUTPUTS
Q0' to Q9'; COUNTER OUTPUTS
D0 to D9; INPUTS DATA
CO; CARRY OUTPUT
OE; OUTPUT ENABLE
LD; INPUT DATA LOAD
ENT; CLOCK & CARRY OUT ENABLE
ENP; CLOCK ENABLE
CK; CLOCK INPUT

CARRY OUTPUT "CO"

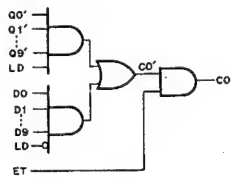

CXK54256P-45 (SONY) (ACCESS TIME = 45nS)

C-MOS 256K(65536x4)-BIT STATIC RAM
– TOP VIEW –

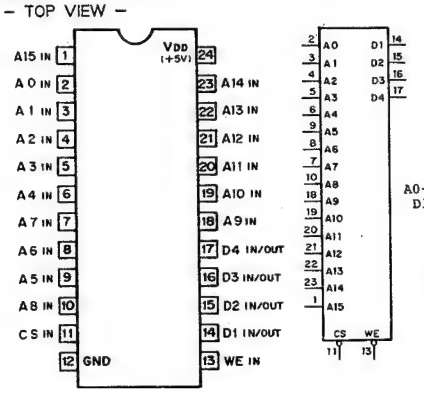

A0–A15 ; ADDRESS INPUTS
D1–D4 ; DATA INPUTS/OUTPUTS
CS ; CHIP SELECT INPUT
WE ; WRITE ENABLE INPUT

WE	CS	D1–D4	FUNCTION
X	1	HI-Z	STANDBY
1	0	D OUT	READ
0	0	D IN	WRITE

0 ; LOW LEVEL
1 ; HIGH LEVEL
X ; DON'T CARE
HI-Z ; HIGH IMPEDANCE

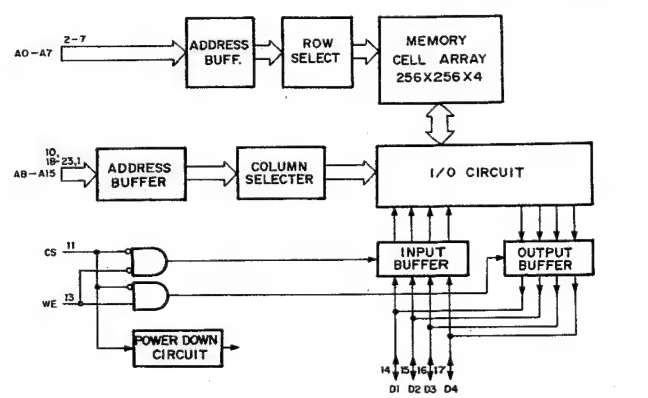

CXD8040G (SONY)

4-POINT INTERPOLATOR
– BOTTOM VIEW –

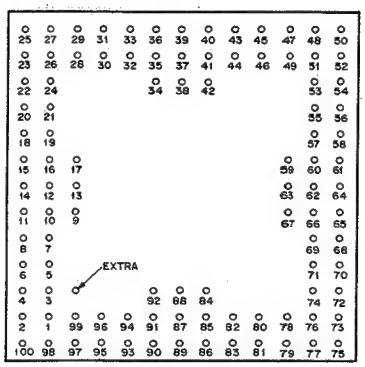

INPUT
A – A11 ; DATA INPUT A
B0 – B11 ; DATA INPUT B
C0 – C11 ; DATA INPUT C
D0 – D11 ; DATA INPUT D
CK ; CLOCK INPUT
TCX ; TEST MODE X (L : TEST MODE)
TCYN ; TEST MODE Y (L : TEST MODE)
X0 – X7 ; INTERPOLATION COEFFICIENT INPUT X
Y0 – Y7 ; INTERPOLATION COEFFICIENT INPUT Y

OUTPUT
E0 – E11 ; DATA OUTPUTS
EN ; OUTPUT ENABLE (L : ENABLE)

(VDD = +3V to +6V)

PIN No.	I/O	SIGNAL	PIN No.	I/O	SIGNAL	PIN No.	I/O	SIGNAL	PIN No.	I/O	SIGNAL
1	–	GND	26	–	GND	51	–	VDD	76	–	VDD
2	I	A0	27	I	A10	52	I	B9	77	I	Y0
3	I	C0	28	I	C10	53	I	D9	78	I	Y5
4	I	A1	29	I	A11	54	I	B8	79	I	Y1
5	I	C1	30	I	C11	55	I	D8	80	I	Y6
6	I	A2	31	O	E6	56	I	B7	81	I	Y2
7	I	C2	32	O	E2	57	I	D7	82	I	Y7
8	I	A3	33	O	E7	58	I	B6	83	I	Y3
9	I	C4	34	O	E0	59	I	D5	84	–	TS OUT
10	I	C3	35	O	E3	60	I	D6	85	I	TCYN
11	I	A4	36	O	E8	61	I	B5	86	I	Y4
12	–	VDD	37	–	GND	62	–	GND	87	–	VDD
13	–	GND	38	–	VDD	63	–	GND	88	–	GND
14	–	GND	39	O	EN	64	–	VDD	89	I	CK
15	I	A5	40	O	E9	65	I	B4	90	I	X4
16	I	C6	41	O	E4	66	I	D3	91	I	TCX
17	I	C5	42	O	E1	67	I	D4	92	–	GND
18	I	A6	43	O	E10	68	I	B3	93	I	X3
19	I	C7	44	O	E5	69	I	D2	94	I	X7
20	I	A7	45	O	E11	70	I	B2	95	I	X2
21	I	C8	46	I	D11	71	I	D1	96	I	X6
22	I	A8	47	I	B11	72	I	B1	97	I	X1
23	I	A9	48	I	B10	73	I	B0	98	I	X0
24	I	C9	49	I	D10	74	I	D0	99	I	X5
25	–	VDD	50	–	GND	75	–	GND	100	–	VDD

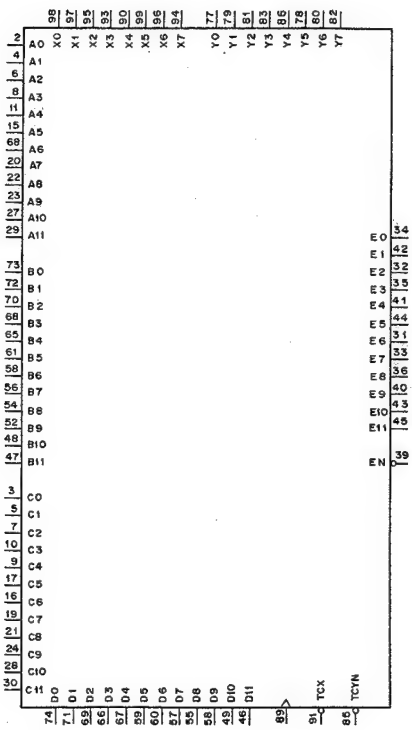

CXK5814P-35 (SONY) (ACCESS TIME = 35nS)
C-MOS 16K (2Kx8) STATIC RAM
– TOP VIEW –

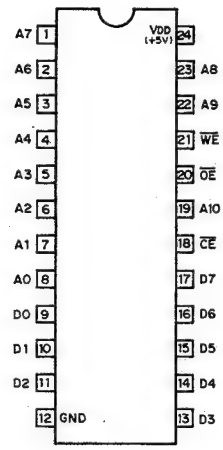

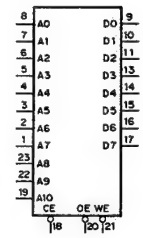

A0 ~ A10 ; ADDRESS INPUTS
D0 ~ D7 ; DATA INPUTS/OUTPUTS
CE ; CHIP ENABLE INPUT
OE ; OUTPUT ENABLE INPUT
WE ; WRITE ENABLE INPUT

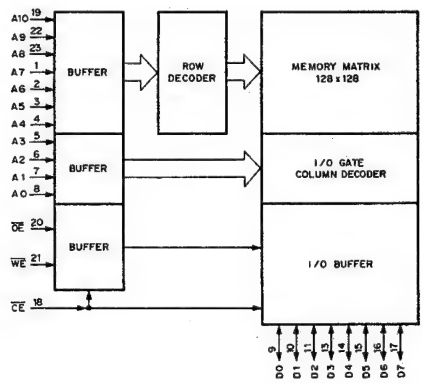

CXD8156Q (SONY)

16-BIT ADDER MULTIPLIER

– TOP VIEW –

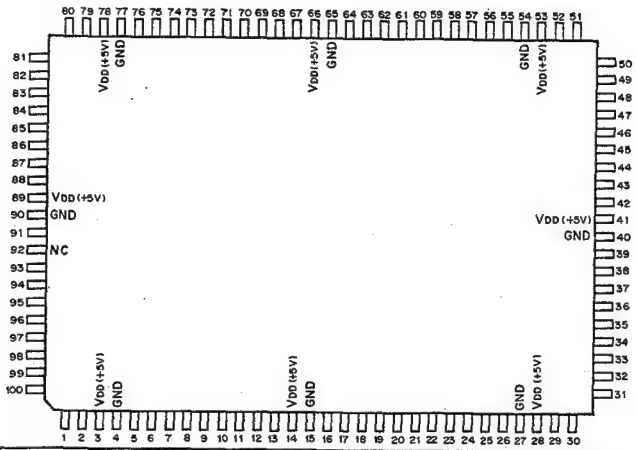

PIN No.	I/O	SYMBOL	PIN No.	I/O	SYMBOL	PIN No.	I/O	SYMBOL	PIN No.	I/O	SYMBOL
1	I	A DATA 00	26	I/O	B DATA 05	51	I	K DATA 06	76	O	Y DATA 11
2	I	A DATA 01	27	–	GND	52	I	K DATA 07	77	–	GND
3	–	VDD (+5V)	28	–	VDD (+5V)	53	–	VDD (+5V)	78	–	VDD (+5V)
4	–	GND	29	I/O	B DATA 06	54	–	GND	79	O	Y DATA 12
5	I	A DATA 02	30	I/O	B DATA 07	55	I	K DATA 08	80	O	Y DATA 13
6	I	A DATA 03	31	I/O	B DATA 08	56	I	K DATA 09	81	O	Y DATA 14
7	I	A DATA 04	32	I/O	B DATA 09	57	I	K DATA 10	82	O	Y DATA 15
8	I	A DATA 05	33	I/O	B DATA 10	58	I	K DATA 11	83	O	Y DATA 16
9	I	A DATA 06	34	I/O	B DATA 11	59	I	K DATA 12	84	O	Y DATA 17
10	I	A DATA 07	35	I/O	B DATA 12	60	I	K DATA 13	85	O	Y DATA 18
11	I	A DATA 08	36	I/O	B DATA 13	61	I	K DATA 14	86	O	Y DATA 19
12	I	A DATA 09	37	I/O	B DATA 14	62	I	K DATA 15	87	O	CARRY OUT
13	I	A DATA 10	38	I/O	B DATA 15	63	O	Y DATA 00	88	I	DIR
14	–	VDD (+5V)	39	I/O	B DATA 16	64	O	Y DATA 01	89	–	VDD (+5V)
15	–	GND	40	–	GND	65	–	GND	90	–	GND
16	I	A DATA 11	41	–	VDD (+5V)	66	–	VDD (+5V)	91	I	CLK B
17	I	A DATA 12	42	I	B DATA 17	67	O	Y DATA 02	92	–	NC
18	I	A DATA 13	43	I	B DATA 18	68	O	Y DATA 03	93	I	CLK A
19	I	A DATA 14	44	I	B DATA 19	69	O	Y DATA 04	94	I	CONT 1
20	I	A DATA 15	45	I	K DATA 00	70	O	Y DATA 05	95	I	CONT 2
21	I/O	B DATA 00	46	I	K DATA 01	71	O	Y DATA 06	96	I	CONT 3
22	I/O	B DATA 01	47	I	K DATA 02	72	O	Y DATA 07	97	I	CONT 4
23	I/O	B DATA 02	48	I	K DATA 03	73	O	Y DATA 08	98	I	CIN 1
24	I/O	B DATA 03	49	I	K DATA 04	74	O	Y DATA 09	99	I	CIN 2
25	I/O	B DATA 04	50	I	K DATA 05	75	O	Y DATA 10	100	O	TEST OUT

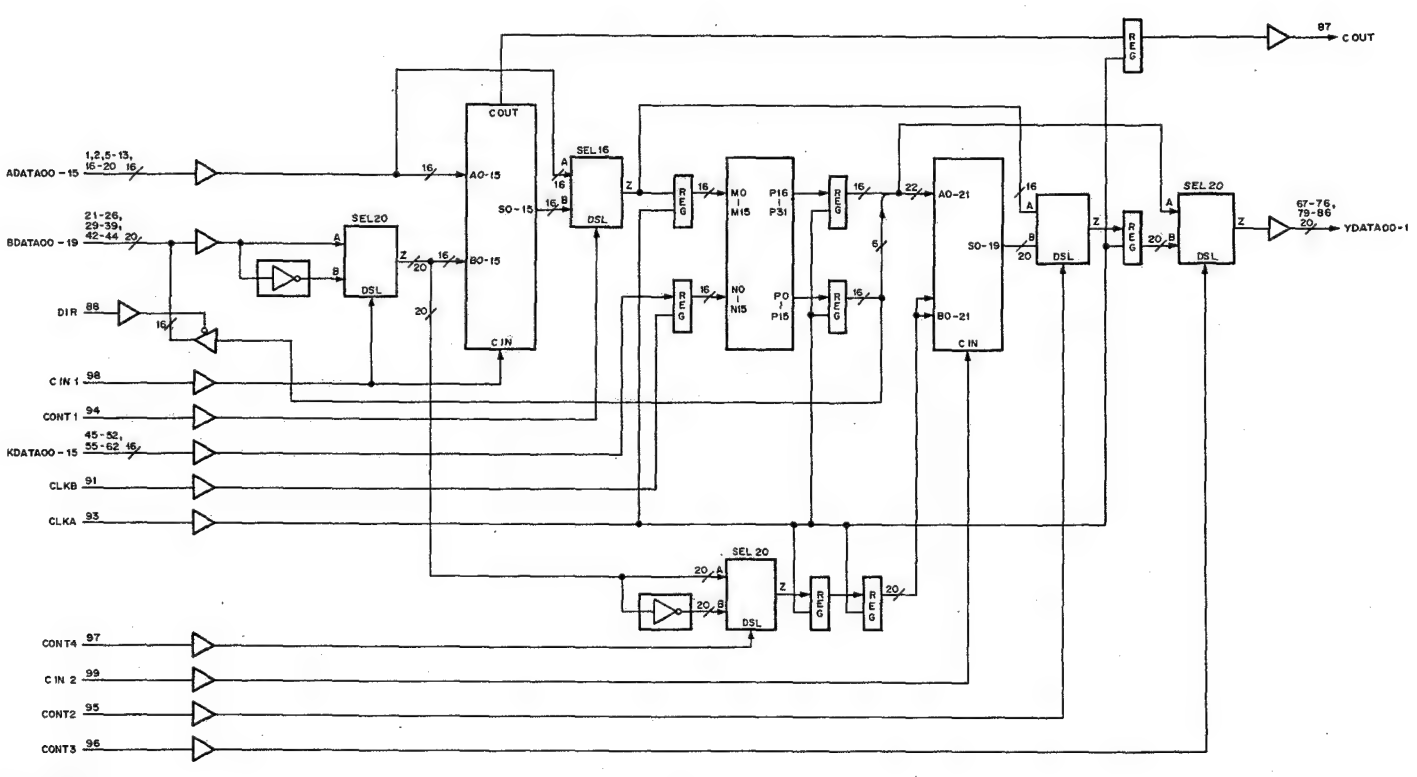

CXD8157Q (SONY)

HC-MOS 16-BIT NON ADDITIVE MIX
– TOP VIEW –

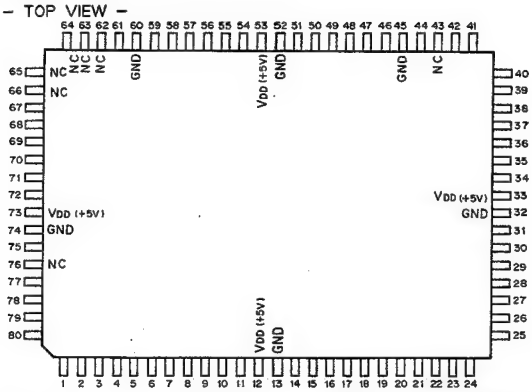

PIN No.	I/O	SYMBOL	PIN No.	I/O	SYMBOL	PIN No.	I/O	SYMBOL	PIN No.	I/O	SYMBOL
1	I	CONT 03	21	I	A DATA 15	41	O	Y DATA 14	61	I	OE
2	I	CONT 02	22	I	B DATA 00	42	O	Y DATA 13	62	–	NC
3	I	CONT 01	23	I	B DATA 01	43	–	NC	63	–	NC
4	I	A DATA 00	24	I	B DATA 02	44	O	Y DATA 12	64	–	NC
5	I	A DATA 01	25	I	B DATA 03	45	–	GND	65	–	NC
6	I	A DATA 02	26	I	B DATA 04	46	O	Y DATA 11	66	–	NC
7	I	A DATA 03	27	I	B DATA 05	47	O	Y DATA 10	67	I	SL168
8	I	A DATA 04	28	I	B DATA 06	48	O	Y DATA 09	68	I	SLPN
9	I	A DATA 05	29	I	B DATA 07	49	O	Y DATA 08	69	O	AEBOUT
10	I	A DATA 06	30	I	B DATA 08	50	O	Y DATA 07	70	O	ALBOUT
11	I	A DATA 07	31	I	B DATA 09	51	O	Y DATA 06	71	O	AGBOUT
12	–	VDD (+5V)	32	–	GND	52	–	GND	72	O	TESTOUT
13	–	GND	33	–	VDD (+5V)	53	–	VDD (+5V)	73	–	VDD (+5V)
14	I	A DATA 08	34	I	B DATA 10	54	O	Y DATA 05	74	–	GND
15	I	A DATA 09	35	I	B DATA 11	55	O	Y DATA 04	75	I	CLK
16	I	A DATA 10	36	I	B DATA 12	56	O	Y DATA 03	76	–	NC
17	I	A DATA 11	37	I	B DATA 13	57	O	Y DATA 02	77	I	AEBIN
18	I	A DATA 12	38	I	B DATA 14	58	O	Y DATA 01	78	I	ALBIN
19	I	A DATA 13	39	I	B DATA 15	59	O	Y DATA 00	79	I	AGBIN
20	I	A DATA 14	40	O	Y DATA 15	60	–	GND	80	I	CONT 04

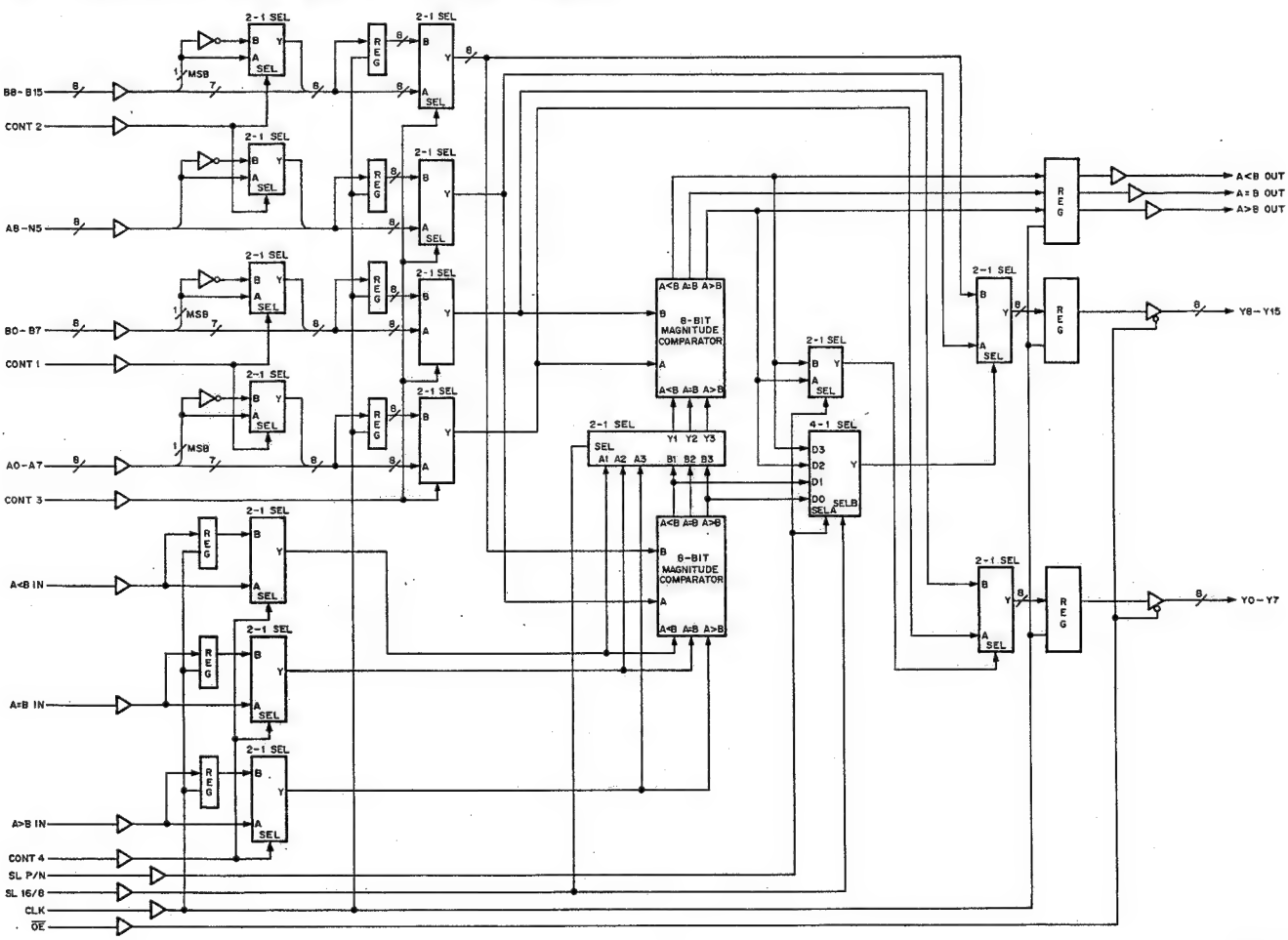

CXD8158Q (SONY)

HC-MOS 5-BIT SLICE 8x4 MATRIX SWITCH
– TOP VIEW –

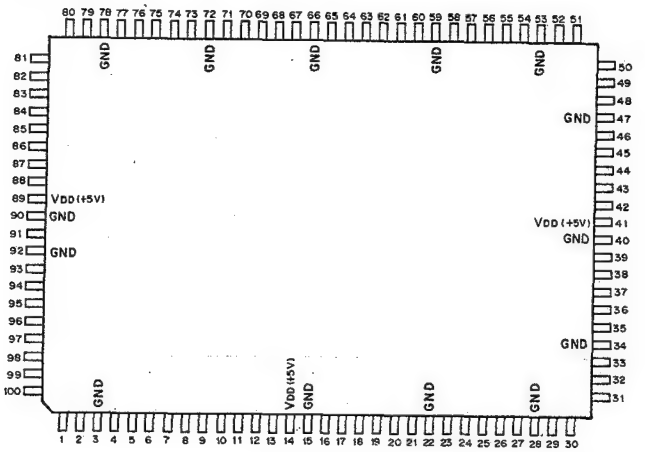

PIN No.	I/O	SYMBOL	PIN No.	I/O	SYMBOL	PIN No.	I/O	SYMBOL	PIN No.	I/O	SYMBOL
1	O	O03	26	I	I13	51	I	I33	76	O	O13
2	O	O04	27	I	I14	52	I	I34	77	O	O14
3	–	GND	28	–	GND	53	–	GND	78	–	GND
4	I	CK3	29	I	I20	54	I	I40	79	I	I60
5	I	D30	30	I	I21	55	I	I41	80	I	I61
6	I	D31	31	I	I22	56	I	I42	81	I	I62
7	I	D32	32	I	I23	57	I	I43	82	I	I63
8	I	D33	33	I	I24	58	I	I44	83	I	I64
9	O	O30	34	–	GND	59	–	GND	84	I	I70
10	O	O31	35	I	CK2	60	I	I50	85	I	I71
11	O	O32	36	I	D20	61	I	I51	86	I	I72
12	O	O33	37	I	D21	62	I	I52	87	I	I73
13	O	O34	38	I	D22	63	I	I53	88	I	I74
14	–	VDD (+5V)	39	I	D23	64	I	I54	89	–	VDD (+5V)
15	–	GND	40	–	GND	65	I	CK1	90	–	GND
16	I	I00	41	–	VDD (+5V)	66	–	GND	91	I	COMCLK
17	I	I01	42	O	O20	67	–	VDD (+5V)	92	–	GND
18	I	I02	43	O	O21	68	I	D10	93	I	CK0
19	I	I03	44	O	O22	69	I	D11	94	I	D00
20	I	I04	45	O	O23	70	I	D12	95	I	D01
21	O	TSOUT	46	O	O24	71	I	D13	96	I	D02
22	–	GND	47	–	GND	72	–	Vss	97	I	D03
23	I	I10	48	I	I30	73	O	O10	98	O	O00
24	I	I11	49	I	I31	74	O	O11	99	O	O01
25	I	I12	50	I	I32	75	O	O12	100	O	O02

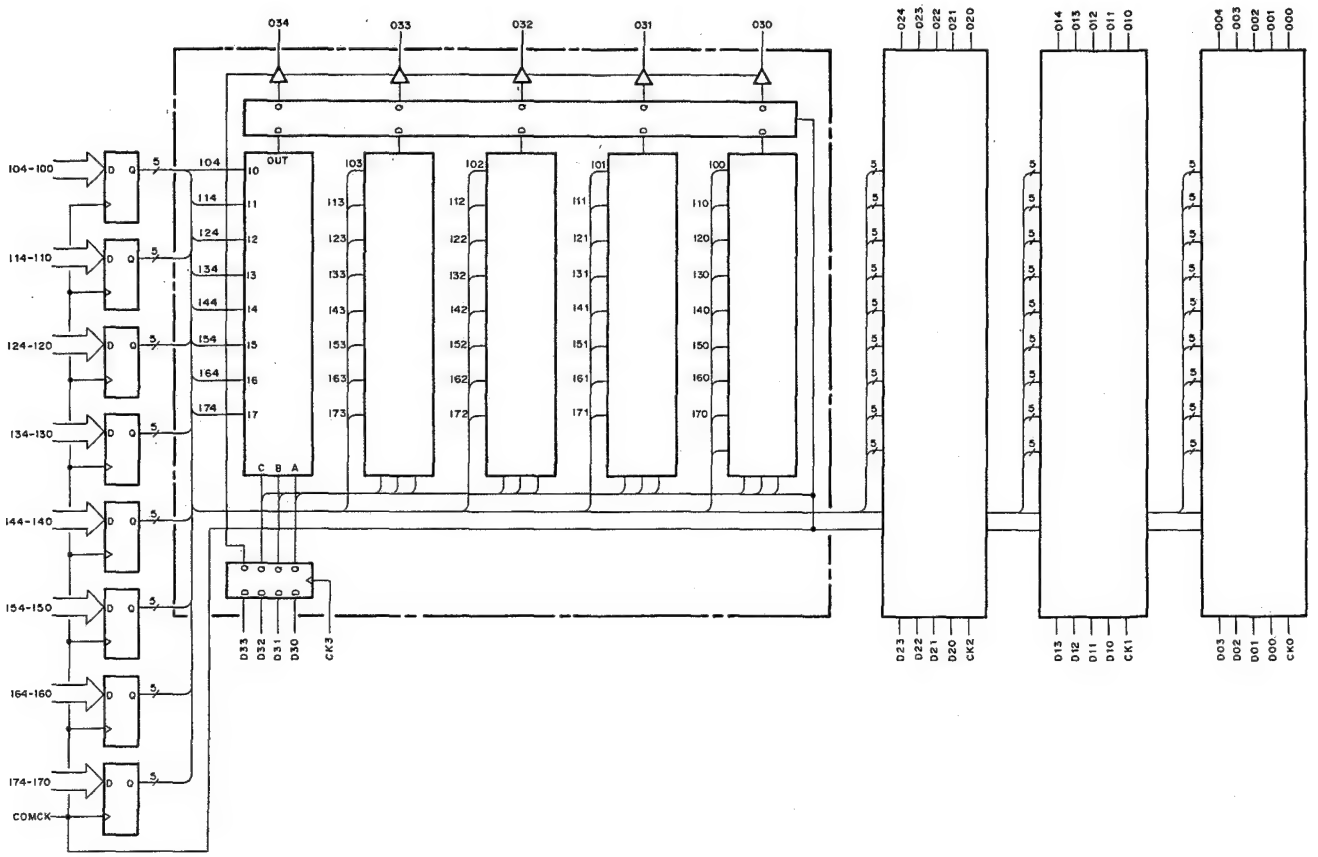

CXK1206M (SONY) FLAT PACKAGE

C-MOS VIDEO FIELD MEMORY (960-COLUMNx306-ROWx4-BIT)
– TOP VIEW –

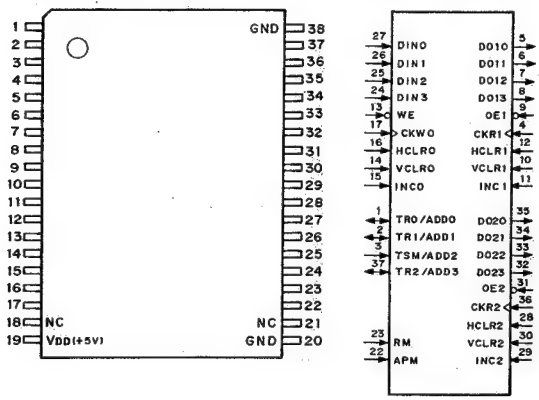

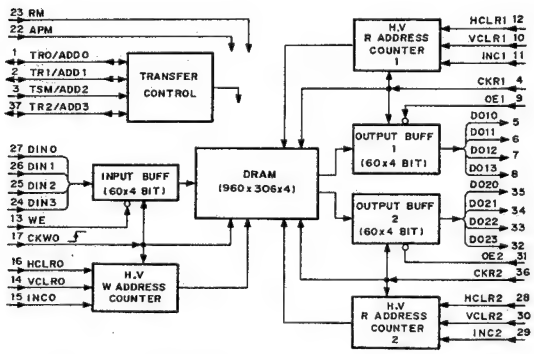

PIN	SIGNAL	DESCRIPTION
1	TR0/ADD0	W PORT 0 TRANSFER SYNC I/O, ADDRESS 0 INPUT
2	TR1/ADD1	R PORT 1 TRANSFER SYNC I/O, ADDRESS 1 INPUT
3	TSM/ADD2	TRANSFER SYNCHRONOUS MODE, ADDRESS 2 INPUT
4	CKR1	R PORT 1 SHIFT SIGNAL INPUT
5	DO10	R PORT 1 DATA 0 OUTPUT
6	DO11	R PORT 1 DATA 1 OUTPUT
7	DO12	R PORT 1 DATA 2 OUTPUT
8	DO13	R PORT 1 DATA 3 OUTPUT
9	OE1	R PORT 1 OUTPUT ENABLE INPUT
10	VCLR1	R PORT 1 VERTICAL CLEAR INPUT
11	INC1	R PORT 1 LINE INCREMENT INPUT
12	HCLR1	R PORT 1 HORIZONTAL CLEAR INPUT
13	WE	W PORT 0 WRITE ENABLE INPUT
14	VCLR0	W PORT 0 VERTICAL CLEAR INPUT
15	INC0	W PORT 0 LINE INCREMENT INPUT
16	HCLR0	W PORT 0 HORIZONTAL CLEAR INPUT
17	CKW0	W PORT 0 SHIFT SIGNAL INPUT
18	NC	(no connection)
19	VDD	+5V INPUT
20	GND	GND
21	NC	(no connection)
22	APM	ADDRESS PRESET MODE INPUT
23	RMM	RECURSIVE MODE ENABLE INPUT
24	DIN3	W PORT 0 DATA 3 INPUT
25	DIN2	W PORT 0 DATA 2 INPUT
26	DIN1	W PORT 0 DATA 1 INPUT
27	DIN0	W PORT 0 DATA 0 INPUT
28	HCLR2	R PORT 2 HORIZONTAL CLEAR INPUT
29	INC2	R PORT 2 LINE INCREMENT INPUT
30	VCLR2	R PORT 2 VERTICAL CLEAR INPUT
31	OE2	R PORT 2 OUTPUT ENABLE INPUT
32	DO23	R PORT 2 DATA 3 OUTPUT
33	DO22	R PORT 2 DATA 2 OUTPUT
34	DO21	R PORT 2 DATA 1 OUTPUT
35	DO20	R PORT 2 DATA 0 OUTPUT
36	CKR2	R PORT 2 SHIFT SIGNAL INPUT
37	TR2/ADD3	R PORT 2 TRANSFER SYNC I/O, ADDRESS 3 INPUT
38	GND	GND

MODE SELECTION

CONTROL INPUTS		TS,TR/ADD			MODE
RM	APM	TSM	TR 0-2	ADD 0-3	
0	0	0	OUTPUT	–	NON RECURSIVE MODE, TRANSFER SYNCHRONOUS MODE OUTPUT
0	0	1	INPUT	–	NON RECURSIVE MODE, TRANSFER SYNCHRONOUS MODE INPUT
0	1	–	–	INPUT	NON RECURSIVE MODE, ADDRESS PRESET MODE
1	0	0	OUTPUT	–	RECURSIVE MODE, TRANSFER SYNCHRONOUS MODE OUTPUT
1	0	1	INPUT	–	RECURSIVE MODE, TRANSFER SYNCHRONOUS MODE INPUT

0:LOW LEVEL 1:HIGH LEVEL

CXK58257P-10LL (SONY) (ACCESS TIME = 100nS)

C-MOS 256K(32768x8)-BIT STATIC RAM
– TOP VIEW –

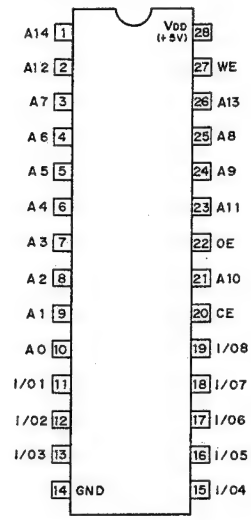

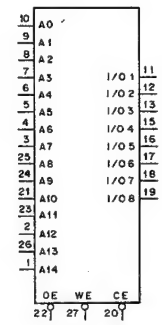

A0 – A14 ; ADDRESS INPUTS
CE ; CHIP ENABLE INPUT
I/O1 – I/O8 ; DATA INPUTS/OUTPUTS
OE ; OUTPUT ENABLE INPUT
WE ; WRITE ENABLE INPUT

CE	OE	WE	MODE	I/O TERMINAL
1	×	×	NOT SELECT	HIGH IMPEDANCE
0	1	1	OUTPUT DISABLE	HIGH IMPEDANCE
0	0	1	READ	OUTPUT DATA
0	×	0	WRITE	INPUT DATA

0 ; LOW LEVEL
1 ; HIGH LEVEL
× ; DON'T CARE

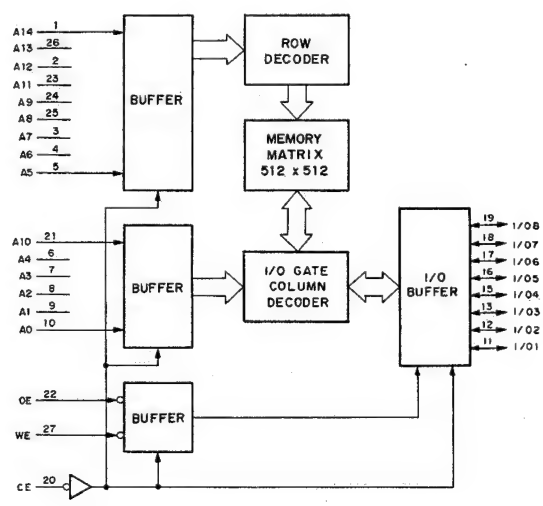

CXK581000P-10L (SONY)

C-MOS 131072-WORDx8-BIT HIGH SPEED STATIC RAM
– TOP VIEW –

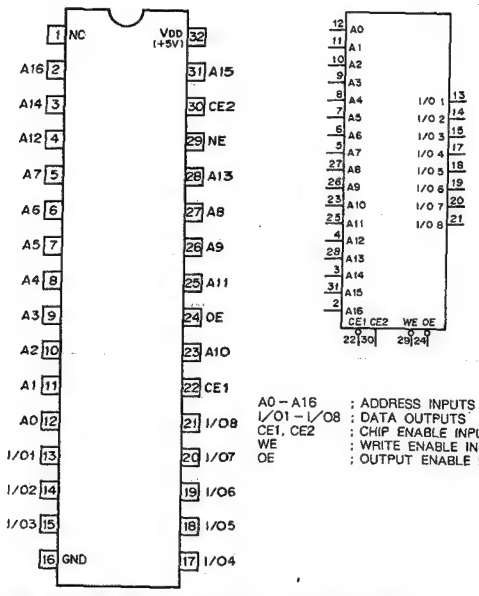

A0 – A16 : ADDRESS INPUTS
I/O1 – I/O8 : DATA OUTPUTS
CE1, CE2 : CHIP ENABLE INPUTS
WE : WRITE ENABLE INPUT
OE : OUTPUT ENABLE INPUT

CE1	CE2	OE	WE	MODE	I/O TERMINAL
1	X	X	X	NOT SELECT	HIGH IMPEDANCE
X	0	X	X	NOT SELECT	HIGH IMPEDANCE
0	1	1	1	OUTPUT DISABLE	HIGH IMPEDANCE
0	1	0	1	READ	DATA OUTPUT
0	1	X	0	WRITE	DATA INPUT

0 ; LOW LEVEL
1 ; HIGH LEVEL
X ; DON'T CARE

CXK58258SP-35 (SONY) (ACCESS TIME = 35nS)

C-MOS 256K(32768x8)-BIT STATIC RAM
– TOP VIEW –

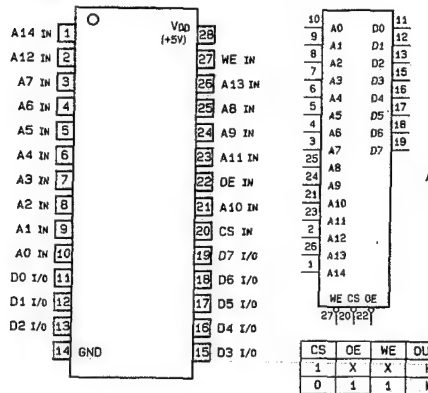

A0–A14: ADDRESS INPUTS
D0–D7: DATA INPUTS/OUTPUTS
CS; CHIP SELECT INPUT
OE; OUTPUT ENABLE INPUT
WE; WRITE ENABLE INPUT

CS	OE	WE	OUTPUTS	FUNCTION
1	X	X	HI-Z	NO SELECTION
0	1	1	HI-Z	OUTPUT DISABLE
0	0	1	DOUT	READ
0	X	0	DIN	WRITE

0; LOW LEVEL
1; HIGH LEVEL
X; DON'T CARE
HI-Z; HIGH IMPEDANCE

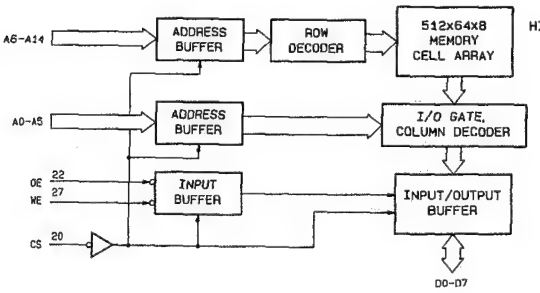

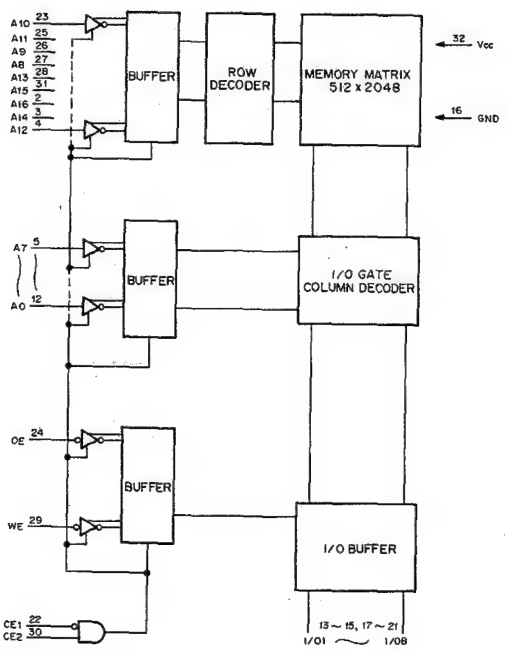

EPM5016-1 (ALTERA)

C-MOS UV ERASABLE PROGRAMMABLE LOGIC DEVICE
– TOP VIEW –

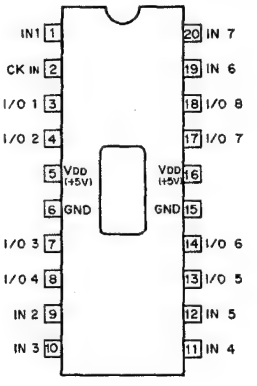

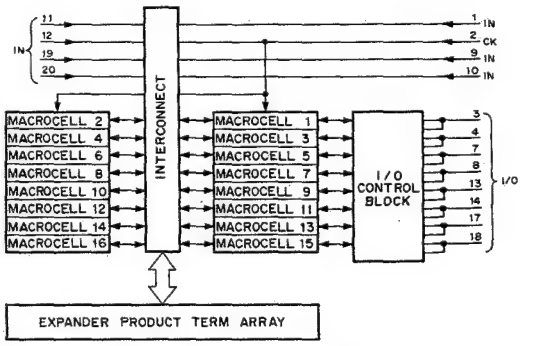

※ABOVE DIAGRAM SHOWS CONDITIONS BEFORE PROGRAMING.

CXQ70116P-8 (SONY)

C-MOS 16-BIT MICROPROCESSOR
– TOP VIEW –

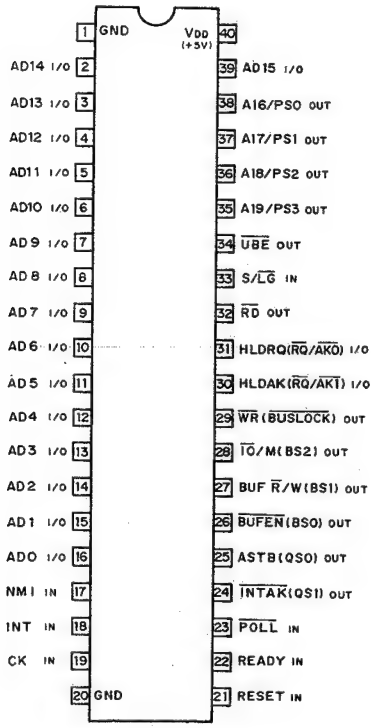

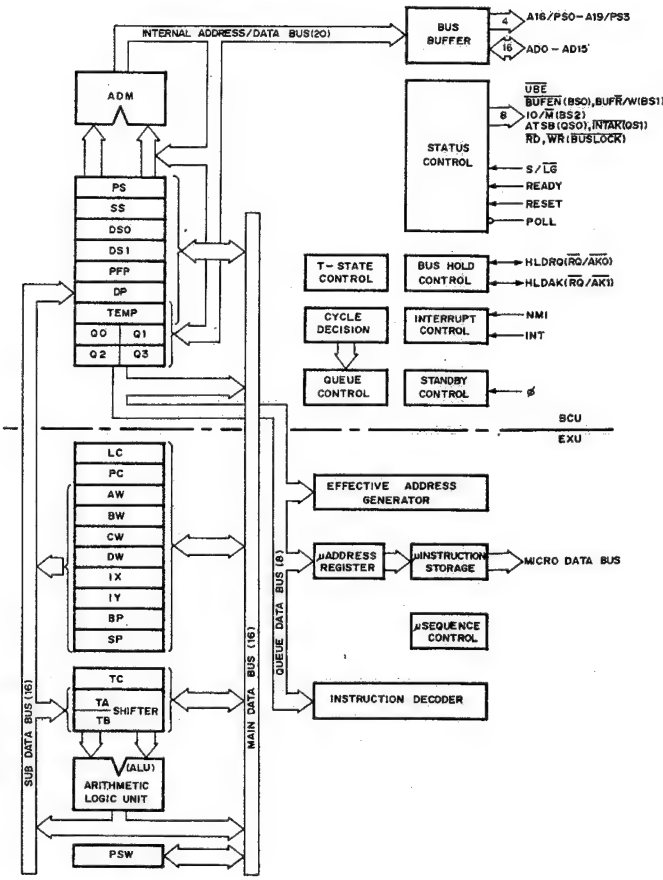


```
    AD15-AD0 ; ADDRESS/DATA BUS
         NMI ; NON-MASKABLE INTERRUPT
         INT ; MASKABLE INTERRUPT
          CK ; CLOCK
       INTAK ; INTERRUPT ACKNOWLEDGE
        ASTB ; ADDRESS STROBE
       BUFEN ; BUFFER ENABLE
    BUF R/W  ; BUFFER READ/WRITE
        IO/M ; IO MEMORY
          WR ; WRITE STROBE
       HLDAK ; HOLD ACKNOWLEDGE
       HLDRQ ; HOLD REQUEST
          RD ; READ STROBE
        S/LG ; SMALL/LARGE
         UBE ; UPPER BYTE ENABLE
A19/PS3-A16/PS0 ; ADDRESS BUS/PROCESSOR STATUS
      QS1, 0 ; QUEUE STATUS
     BS2-BS0 ; BUS STATUS
    BUSLOCK  ; BUS LOCK
  RQ/AK1, 0  ; HOLD REQUEST/ACKNOWLEDGE
```

PIN No.	FUNCTION	
	S/LG=HIGH LEVEL	S/LG=LOW LEVEL
24	INTAK	QS1
25	ASTB	QS0
26	BUFEN	BS0
27	BUF R/W	BS1
28	IO/M	BS2
29	WR	BUSLOCK
30	HLDAK	RQ/AK1
31	HLDRQ	RQ/AK0

GAL16V8A-10LP (LATTICE)

C-MOS ELECTRICALLY ERASABLE PROGRAMMABLE LOGIC DEVICE
– TOP VIEW –

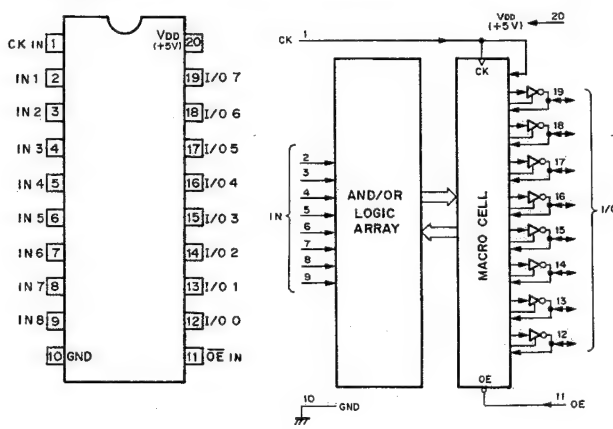

* ABOVE DIAGRAM SHOWS CONDITIONS BEFORE PROGRAMMING.

CXQ71011P (SONY)

C-MOS CLOCK PULSE GENERATOR/DRIVER
– TOP VIEW –

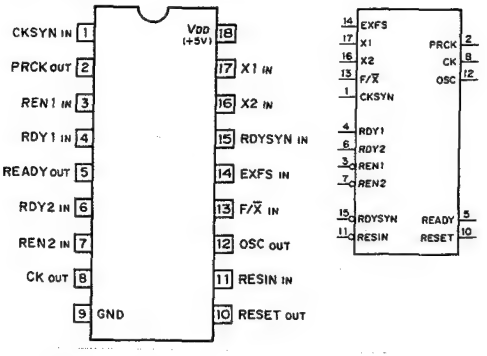

X1,X2 ; CRYSTAL INPUT
EXFS ; EXTERNAL FREQUENCY SOURCE INPUT
F/$\overline{X}$; FREQUENCY/CRYSTAL SELECT INPUT
CK ; PROCESSOR CLOCK OUTPUT
PRCK ; PERIPHERAL CLOCK OUTPUT
OSC ; OSCILLATOR OUTPUT
CKSYN ; CLOCK SYNCHRONIZATION INPUT
RESIN ; RESET INPUT
RDY1, RDY2 ; BUS READY INPUT
REN1, REN2 ; READY ENABLE INPUT
RDYSYN ; READY SYNCHRONIZATION SELECT INPUT

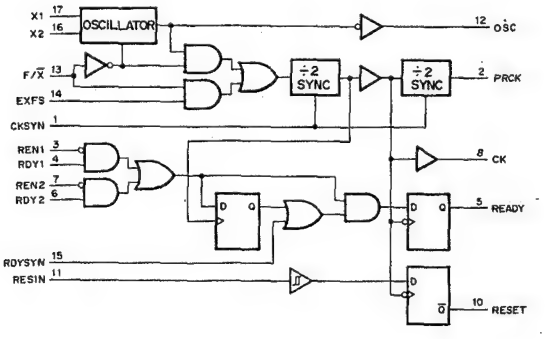

CXQ71059P (SONY)

C-MOS INTERRUPT CONTROL UNIT
– TOP VIEW –

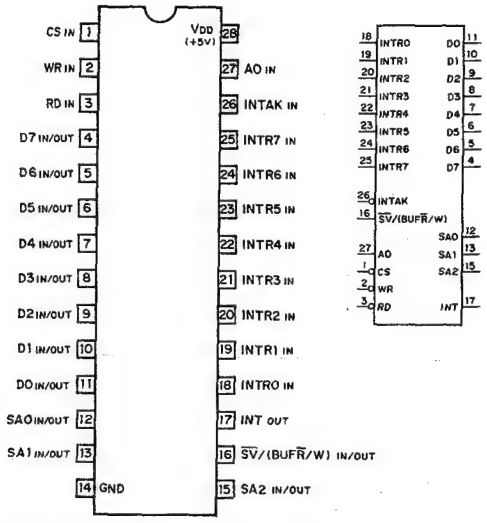

INTR0–INTR7 ; INTERRUPT REQUEST INPUTS
D0–D7 ; DATA BUS INPUTS/OUTPUTS
CS ; CHIP SELECT INPUT
RD ; READ STROBE INPUT
WR ; WRITE STROBE INPUT
A0 ; ADDRESS INPUT
INT ; INTERRUPT OUTPUT
INTAK ; INTERRUPT ACKNOWLEDGE INPUT
SV/(BUFR/W) ; SLAVE/BUFFER READ/WRITE INPUT/OUTPUT
SA0–SA2 ; SLAVE ADDRESS INPUTS/OUTPUTS

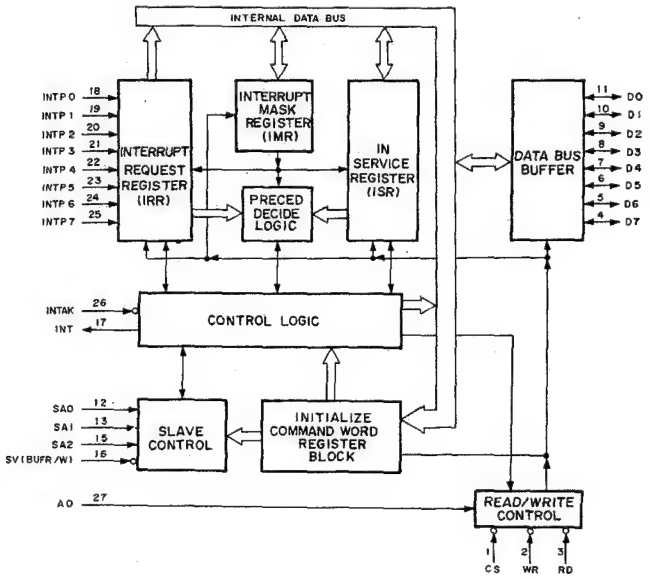

CY7C291L-35PC (CYPRESS)

C-MOS 16K(2048x8)-BIT EPROM
– TOP VIEW –

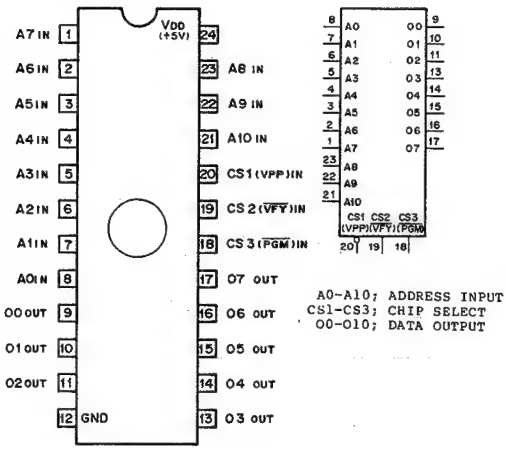

A0~A10; ADDRESS INPUT
CS1-CS3; CHIP SELECT
O0-O10; DATA OUTPUT

MODE SELECTION

CS1	CS2	CS3	OUTPUTS	MODE
0	1	1	DATA OUT	READ
1	X	X	HI-Z	OUTPUT DISABLE
X	0	X	HI-Z	OUTPUT DISABLE
X	X	0	HI-Z	OUTPUT DISABLE
VPP	1	0	DATA IN	PROGRAM
VPP	0	1	DATA OUT	PROGRAM VERIFY
VPP	1	1	HI-Z	PROGRAM INHIBIT
VPP	1	0	DATA IN	INTELLIGENT PROGRAM
0	0	VPP	ONES	BLANK CHECK ONES
0	1	VPP	ZEROS	BLANK CHECK ZEROS

0; LOW LEVEL
1; HIGH LEVEL
X; DON'T CARE
(NOT TO EXCEED VDD +5%)
HI-Z; HIGH IMPEDANCE
VPP; PROGRAMING VOLTAGE
(+13V to +14V)

HM63021P-28 (HITACHI) (ACCESS TIME = 28nS)

2048 WORDx8-BIT LINE MEMORY
– TOP VIEW –

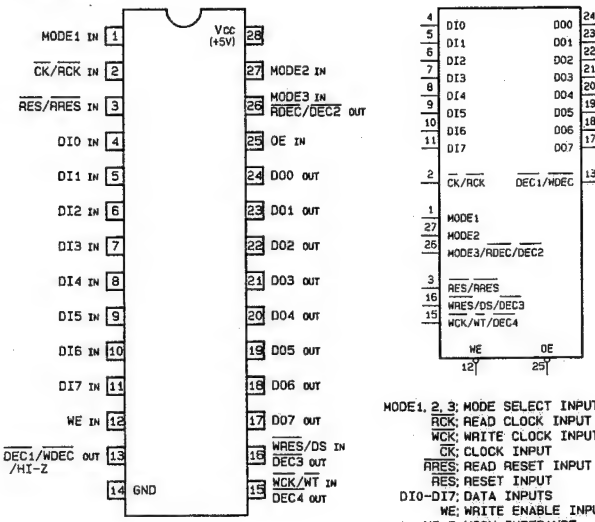

MODE1	MODE2	MODE3	MODE
1	1	1	TIME BASE COMPRESSING /EXPANDING
1	1	0	DOUBLE SPEED EXCHANGE
1	0	*	TBC
0	1	*	1H/2H DELAY
0	0	*	DELAY LINE

0; LOW LEVEL
1; HIGH LEVEL
*; DEC OUTPUT SIGNAL

MODE1, 2, 3; MODE SELECT INPUTS
RCK; READ CLOCK INPUT
WCK; WRITE CLOCK INPUT
CK; CLOCK INPUT
RRES; READ RESET INPUT
RES; RESET INPUT
DI0-DI7; DATA INPUTS
WE; WRITE ENABLE INPUT
HI-Z; HIGH IMPEDANCE
WT; WRITE TIMING INPUT
DEC1, 2, 3, 4; DECODE PULSE OUTPUTS
WDEC; WRITE DECODE PULSE OUTPUT
RDEC; READ DECODE PULSE OUTPUT
DS; DELAY SELECT INPUT
DO0-DO7; DATA OUTPUTS
OE; OUTPUT ENABLE INPUT

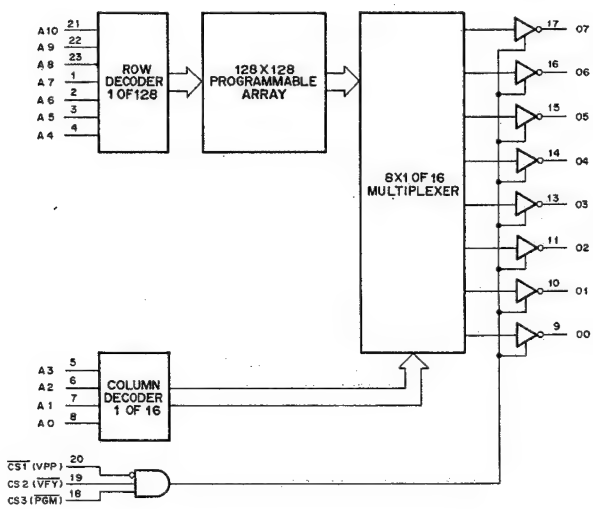

PIN NO.	MODE				
	TIME BASE COMPRESSING /EXPANDING	DOUBLE SPEED EXCHANGE	TBC	1H/2H DELAY	DELAY LINE
1	MODE1				
2	RCK			CK	
3	RRES			RES	
4-11	DI0-DI7				
12	WE				
13	HI-Z		WDEC	DEC1	
15	WCK			WT	DEC4
16	WRES			DS	DEC3
17-24	DO0-DO7				
25	OE				
26	MODE3		RDEC	DEC2	
27	MODE2				

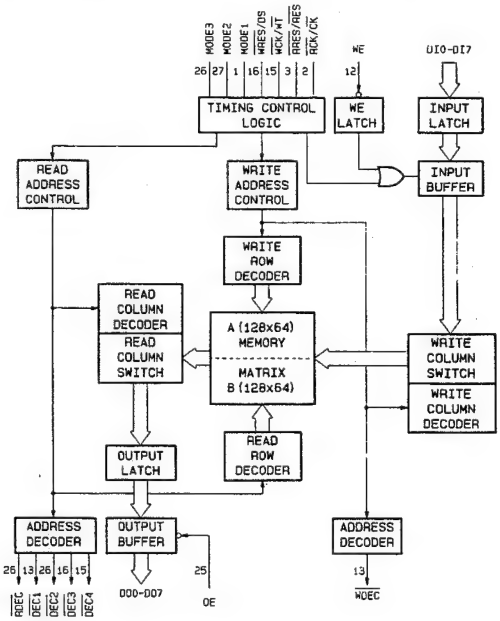

HN58C65P-25 (HITACHI)

C-MOS 64K (8192x8)-BIT EEPROM

– TOP VIEW –

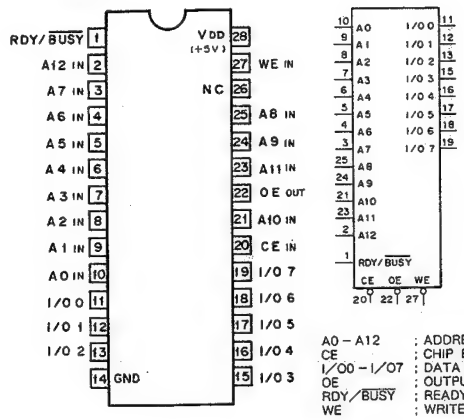

A0 – A12 ; ADDRESS INPUTS
CE ; CHIP ENABLE INPUT
I/O0 – I/O7 ; DATA INPUTS/OUTPUTS
OE ; OUTPUT ENABLE
RDY/BUSY ; READY/BUSY OUTPUT
WE ; WRITE ENABLE INPUT

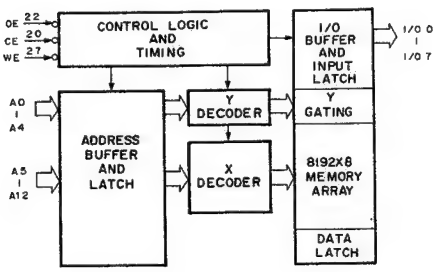

CE	OE	WE	RDY/BUSY	I/O TERMINAL	FUNCTION
0	0	1	HI-Z	DOUT	READ
1	X	X	HI-Z	HI-Z	STANDBY
0	1	0	HI-Z→LOW	DIN	WRITE
0	1	1	HI-Z	HI-Z	DESELECT
X	X	1	HI-Z	–	WRITE INH
X	0	X	HI-Z	–	WRITE INH
0	0	1	LOW	DATA OUT (I/O7)	DATA POLLING

0 ; LOW LEVEL
1 ; HIGH LEVEL
X ; DON'T CARE
HI-Z ; HIGH IMPEDANCE

L29C520PC (LOGIC DEVICES)

C-MOS 8-BIT 2-OR 4-LEVEL PIPELINE REGISTER WITH 3-STATE OUTPUT

– TOP VIEW –

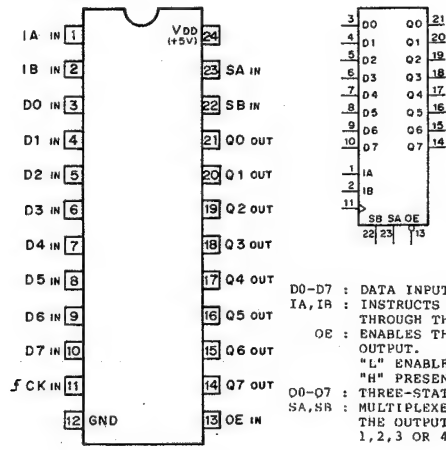

D0–D7 : DATA INPUTS
IA, IB : INSTRUCTS THE DATA PATH THROUGH THE FOUR REGISTERS.
OE : ENABLES THE THREE-STATE OUTPUT.
"L" ENABLES THE OUTPUT.
"H" PRESENTS A HIGH IMPEDANCE.
D0–D7 : THREE-STATE OUTPUTS
SA, SB : MULTIPLEXER SELECTS FOR THE OUTPUT DATA OF REGISTER 1, 2, 3 OR 4.

IB IB	TRANSFER OF DATA
0 0	D→R1 R1→R2 R2→R3 R3→R4
0 1	D→R3 R3→R4 R1, R2 ON HOLD
1 0	D→R1 R1→R2 R3, R4 ON HOLD
1 1	ALL REGISTERS ON HOLD

SB SA	REGISTER SELECTED
0 0	REG.4
0 1	REG.3
1 0	REG.2
1 1	REG.1

0 : LOW LEVEL D : DATA INPUT
1 : HIGH LEVEL R : REGISTER

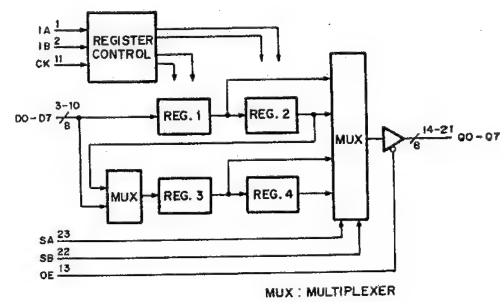

MUX : MULTIPLEXER

LT1171CT (LINEAR TECHNOLOGY)

SWITCHING REGULATORS (100kHz)

– SIDE VIEW –

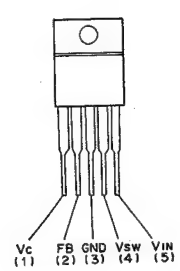

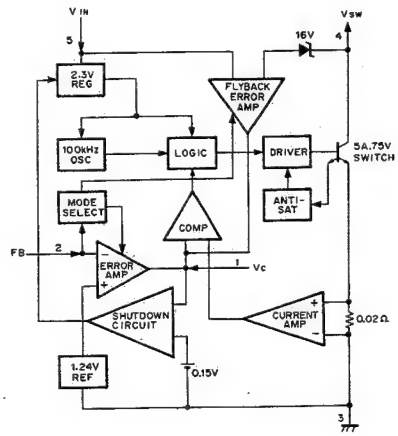

FB ; FEEDBACK
GND ; GROUND
Vc ; CONTROL VOLTAGE IN
Vsw ; SWITCH OUT
VIN ; POWER VOLTAGE IN

MB7112L (FUJITSU) (ACCESS TIME = 50nS)

256-BIT (32x8) PROM WITH 3-STATE OUTPUT

– TOP VIEW –

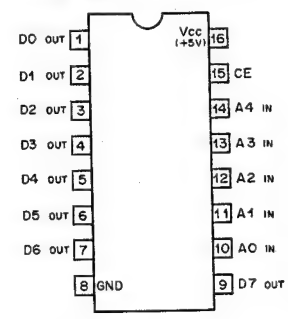

A0–A4 ; ADDRESS INPUTS
D0–D7 ; DATA OUTPUTS
CE ; CHIP ENABLE INPUT

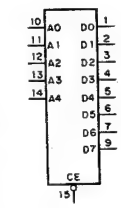

CE	OUTPUT
0	ENABLE
1	HI – Z

0 ; LOW LEVEL
1 ; HIGH LEVEL
HI-Z ; HIGH IMPEDANCE

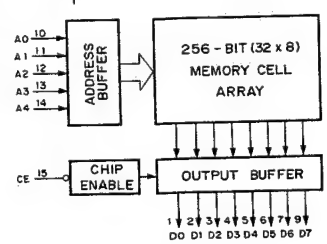

LSP001AC-Q (LOGIC DEVICES)

VIDEO SIGNAL PROCESS DIGITAL FILTER

– TOP VIEW –

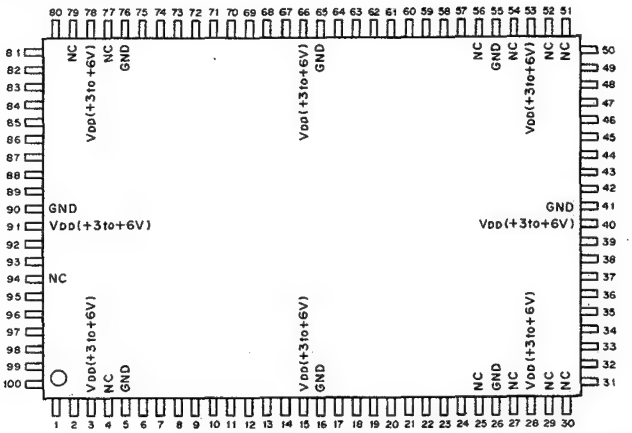
NC
VDD(+3to+6V)
GND
NC
GND
VDD(+3to+6V)
NC
GND
VDD(+3to+6V)
NC

MB8421-90LP (FUJITSU) (ACCESS TIME = 90nS)

C-MOS 16384 (2Kx8) BIT DUAL PORT STATIC RAM

– TOP VIEW –

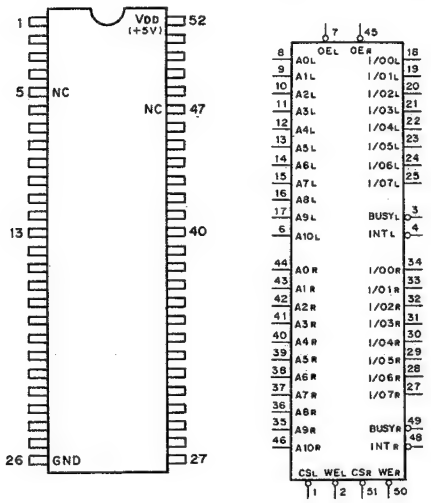

A0L-A10L, A0R-A10R ; ADDRESS INPUTS
I/O0L-I/O70L, I/O0R-I/O7R ; DATA INPUTS/OUTPUTS
CSL, CSR ; CHIP SELECT INPUT
WEL, WER ; WRITE ENABLE INPUT
OEL, OER ; OUTPUT ENABLE INPUT
BUSYL, BUSYR ; BUSY OUTPUT
INTL, INTR ; INTERRUPT OUTPUT

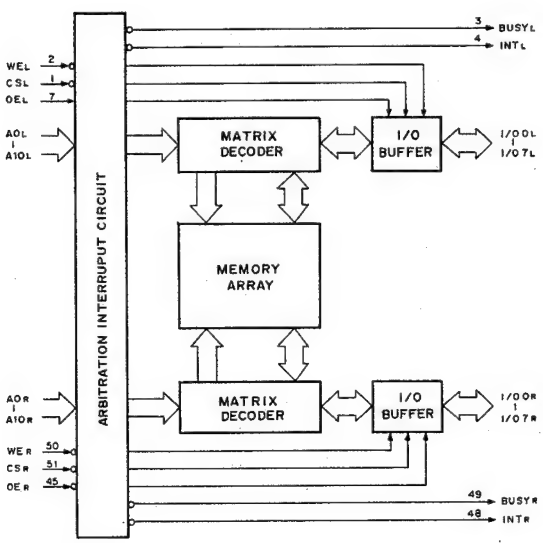

MB8431-90LP (FUJITSU)

C-MOS 16K (2048x8)-BIT DUAL PORT STATIC RAM

– TOP VIEW –

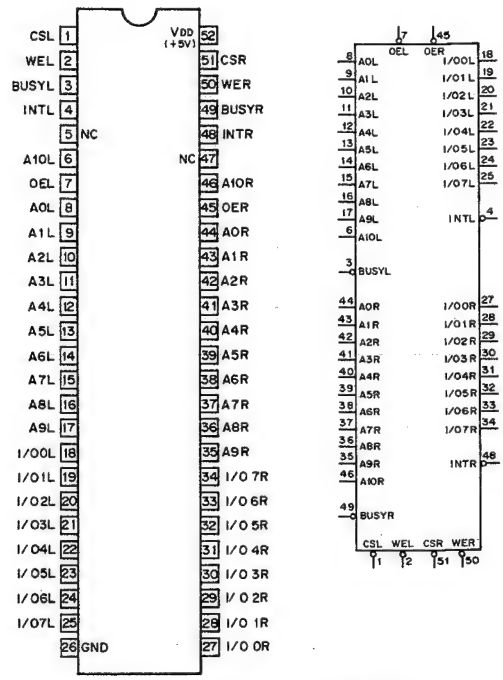

A0L – A10L, A0R – A10R ; ADDRESS INPUTS
I/O0L – I/O7L, I/O0R – I/O7R ; DATA INPUTS/OUTPUTS
CSL, CSR ; CHIP SELECT INPUT
WEL, WER ; WRITE ENABLE INPUT
OEL, OER ; OUTPUT ENABLE INPUT
BUSYL, BUSYR ; BUSY INPUT
INTL, INTR ; INTERRUPT OUTPUT

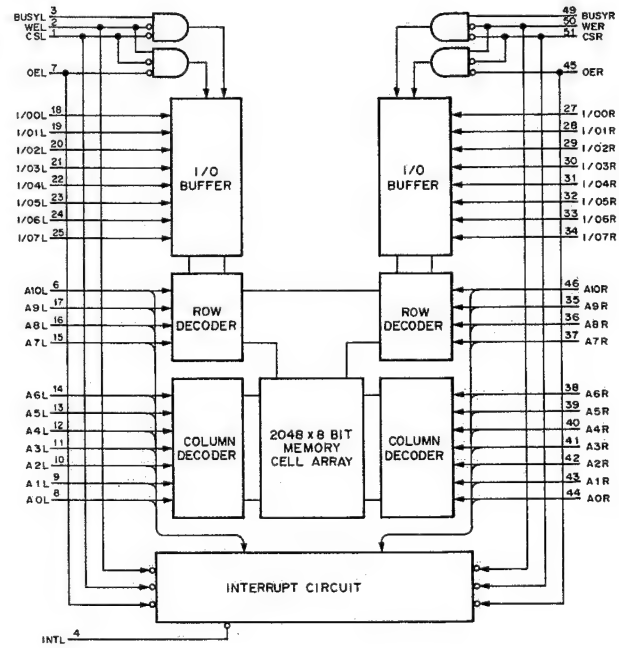

MBM28C64-25 (FUJITSU) (ACCESS TIME = 250nS)

C-MOS 64K(8Kx8) BIT EEPROM WITH 3-STATE OUTPUTS

– TOP VIEW –

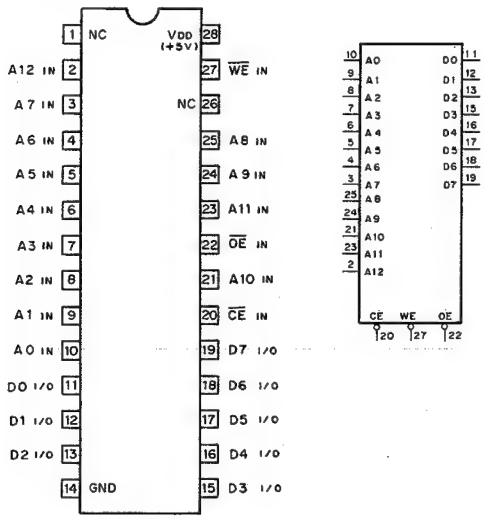

A0-A12 ; ADDRESS INPUTS
D0-D7 ; DATA INPUTS/OUTPUTS
$\overline{CE}$; CHIP ENABLE INPUT
$\overline{WE}$; WRITE ENABLE INPUT
$\overline{OE}$; OUTPUT ENABLE INPUT

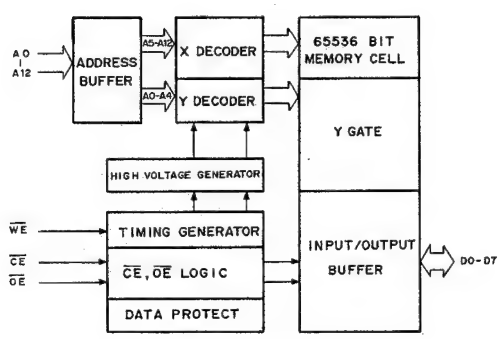

PEEL18CV8-25 (AMI)

PEEL18CV8P-35 (AMI)

C-MOS ELECTRICALLY ERASABLE PROGRAMMABLE LOGIC DEVICE

– TOP VIEW –

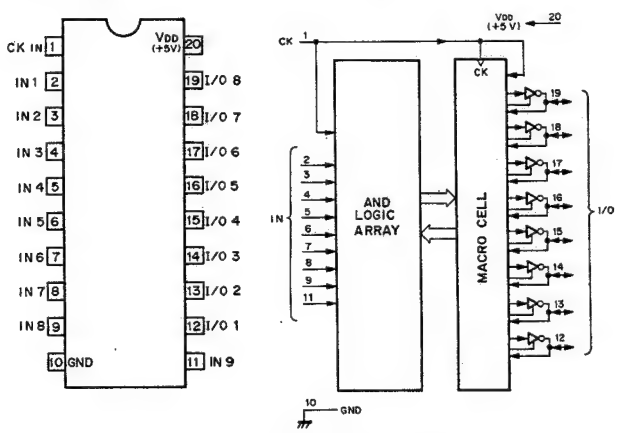

* ABOVE DIAGRAM SHOWS CONDITIONS BEFORE PROGRAMMING.

N74F85N (SIGNETICS)

TTL 4-BIT MAGNITUDE COMPARATOR

– TOP VIEW –

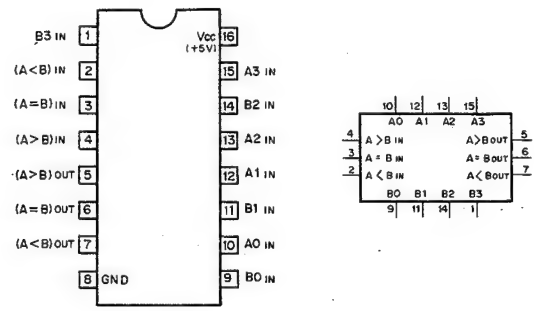

INPUTS								OUTPUTS		
DATA COMPARING					CASCADING					
	A3 , B3	A2 , B2	A1 , B1	A0 , B0	A<B	A=B	A>B	A<B	A=B	A>B
A>B	A3 > B3	X	X	X	X	X	X	0	0	1
	A3 = B3	A2 > B2	X	X						
	A3 = B3	A2 = B2	A1 > B1	X						
	A3 = B3	A2 = B2	A1 = B1	A0 > B0						
A=B	A3 = B3	A2 = B2	A1 = B1	A0 = B0	0	0	0	1	0	1
					0	0	1	0	0	1
					X	1	X	0	1	0
					1	0	0	1	0	0
					1	0	1	0	0	0
A<B	A3 = B3	A2 = B2	A1 = B1	A0 < B0	X	X	X	1	0	0
	A3 = B3	A2 = B2	A1 < B1	X						
	A3 = B3	A2 < B2	X	X						
	A3 < B3	X	X	X						

0 ; LOW LEVEL 1 ; HIGH LEVEL X ; DON'T CARE

SN74ALS138N (TI)

TTL 3-TO-8-LINE DECODER/DEMULTIPLEXER

– TOP VIEW –

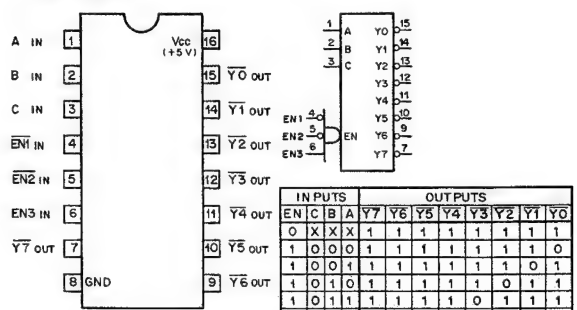

INPUTS				OUTPUTS							
EN	C	B	A	Y7	Y6	Y5	Y4	Y3	Y2	Y1	Y0
0	X	X	X	1	1	1	1	1	1	1	1
1	0	0	0	1	1	1	1	1	1	1	0
1	0	0	1	1	1	1	1	1	1	0	1
1	0	1	0	1	1	1	1	1	0	1	1
1	0	1	1	1	1	1	1	0	1	1	1
1	1	0	0	1	1	1	0	1	1	1	1
1	1	0	1	1	1	0	1	1	1	1	1
1	1	1	0	1	0	1	1	1	1	1	1
1	1	1	1	0	1	1	1	1	1	1	1

EN = EN1 · EN2 · EN3

0 ; LOW LEVEL
1 ; HIGH LEVEL
X ; DON'T CARE

SN74ALS27N (TI)

TTL 3-INPUT POSITIVE-NOR GATE

– TOP VIEW –

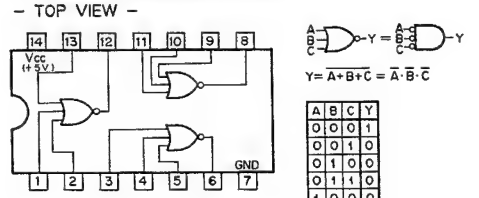

A	B	C	Y
0	0	0	1
0	0	1	0
0	1	0	0
0	1	1	0
1	0	0	0
1	0	1	0
1	1	0	0
1	1	1	0

0 ; LOW LEVEL
1 ; HIGH LEVEL

SM5828P (NPC)

C-MOS 128 STEPS 8 BITS PROGRAMABLE SHIFT REGISTER
– TOP VIEW –

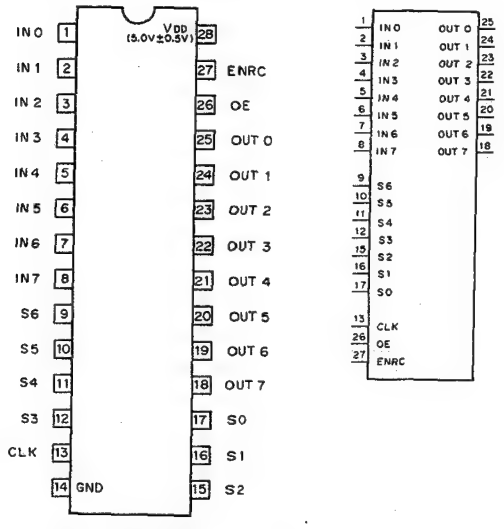

CLK ; CLOCK INPUT
ENRC ; CIRCULATION CONTROL
IN0–IN7 ; DATA INPUT
OE ; OUTPUT ENABLE
OUT0–OUT7 ; DATA OUTPUT
S0–S6 ; REGISTER LENGTH SELECT

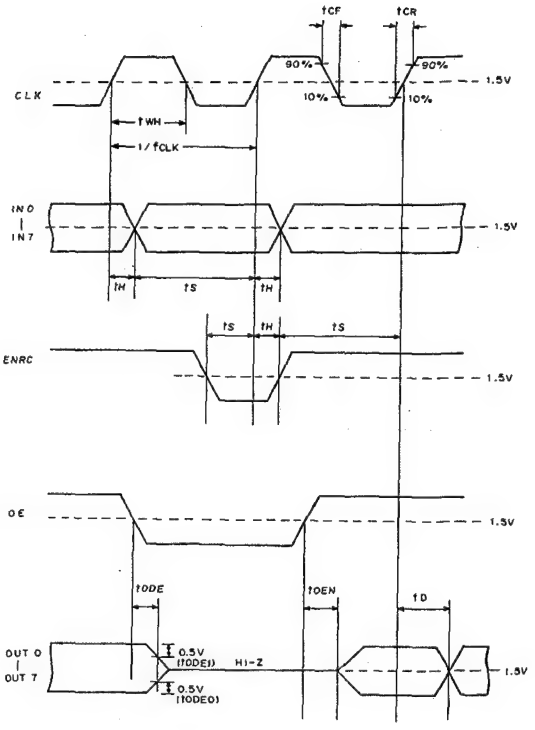

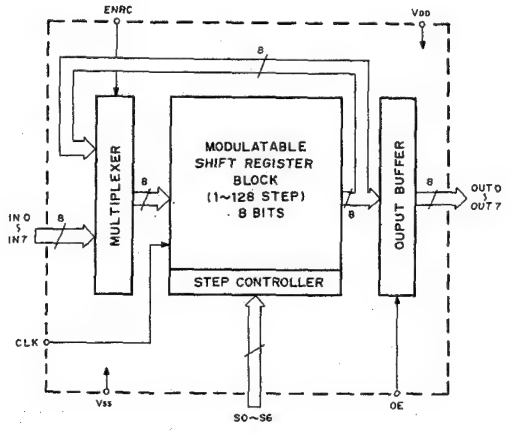

SN74ALS161BN (TI)

TTL PRESETTABLE SYNCHRONOUS 4-BIT BINARY COUNTER
– TOP VIEW –

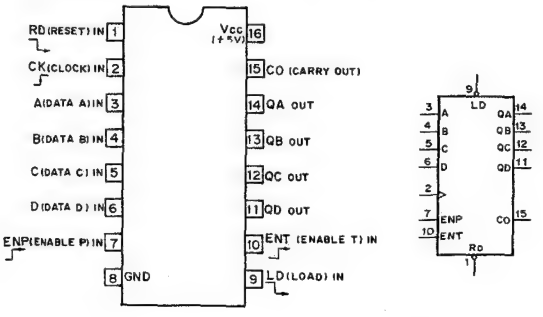

MODE SELECTION

CONTROL INPUTS				MODE
Ro	LD	ENP	ENT	
0	X	X	X	RESET (ASYNCHRONOUS)
1	0	X	X	PRESET (SYNCHRONOUS)
1	1	0	X	NO COUNT
1	1	X	0	NO COUNT
1	1	1	1	COUNT

0; LOW LEVEL
1; HIGH LEVEL
X; DON'T CARE

COUNT SEQUENCE

COUNT	OUTPUTS			
	QD	QC	QB	QA
0	0	0	0	0
1	0	0	0	1
2	0	0	1	0
3	0	0	1	1
4	0	1	0	0
5	0	1	0	1
6	0	1	1	0
7	0	1	1	1
8	1	0	0	0
9	1	0	0	1
10	1	0	1	0
11	1	0	1	1
12	1	1	0	0
13	1	1	0	1
14	1	1	1	0
15	1	1	1	1

CARRY OUTPUT "CO"

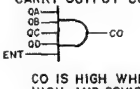

CO IS HIGH WHEN ENT INPUT IS HIGH AND COUNT IS "15".

MODULATABLE SHIFT REGISTER BLOCK

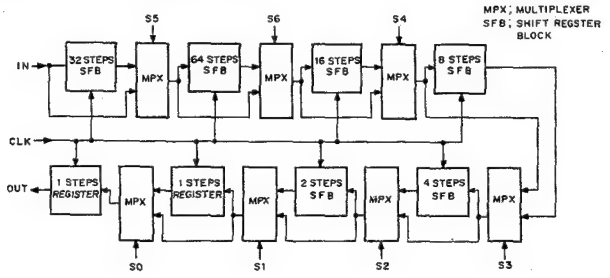

SN74ALS244BN (TI)

TTL 3-STATE SCHMITT TRIGGER BUFFER/DRIVER
– TOP VIEW –

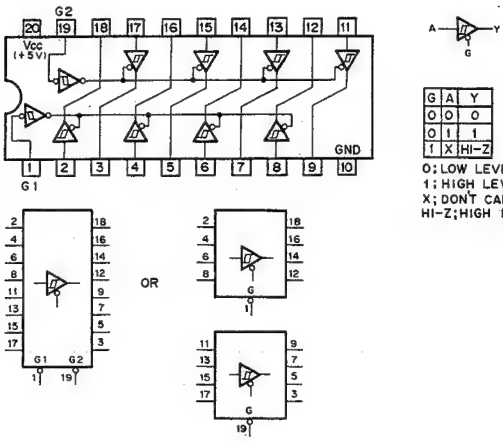

G	A	Y
0	0	0
0	1	1
1	X	HI-Z

0 ; LOW LEVEL
1 ; HIGH LEVEL
X ; DON'T CARE
HI-Z ; HIGH IMPEDANCE

SN74ALS541N (TI)

TTL BUFFERS AND LINE DRIVERS WITH 3-STATE OUTPUTS
– TOP VIEW –

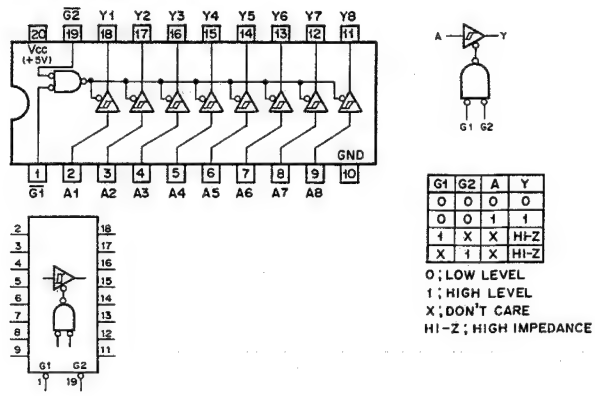

G1	G2	A	Y
0	0	0	0
0	0	1	1
1	X	X	HI-Z
X	1	X	HI-Z

0 ; LOW LEVEL
1 ; HIGH LEVEL
X ; DON'T CARE
HI-Z ; HIGH IMPEDANCE

SN74ALS273N (TI)

TTL D-TYPE FLIP-FLOP WITH DIRECT RESET
– TOP VIEW –

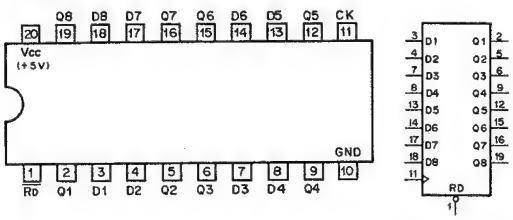

EACH FLIP-FLOP

INPUTS			OUT
RD	CK	D	Q
0	X	X	0
1	↓	0	0
1	↓	1	1
1	0	X	Q0

0 ; LOW LEVEL
1 ; HIGH LEVEL
X ; DON'T CARE

SN74ALS564AN (TI)

TTL OCTAL D-TYPE FLIP-FLOPS WITH 3-STATE OUTPUTS

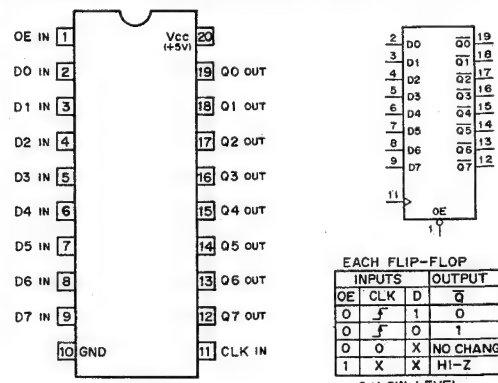

EACH FLIP-FLOP

INPUTS			OUTPUT
OE	CLK	D	Q
0	↑	1	0
0	↑	0	1
0	0	X	NO CHANGE
1	X	X	HI-Z

0 ; LOW LEVEL
1 ; HIGH LEVEL
X ; DON'T CARE
HI-Z ; HIGH IMPEDANCE

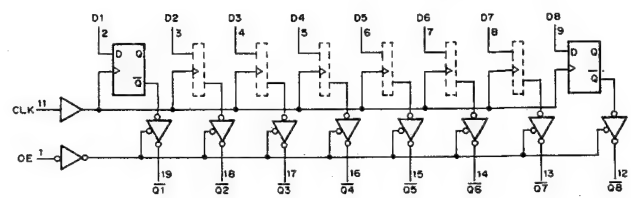

SN74ALS30AN (TI)

TTL 8-INPUT POSITIVE-NAND GATE
– TOP VIEW –

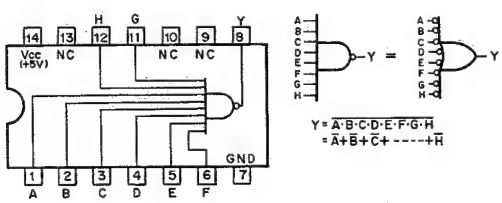

SN74ALS575NT (TI)

TTL 3-STATE OCTAL D-TYPE EDGE-TRIGGERED FLIP-FLOPS WITH CLEAR
– TOP VIEW –

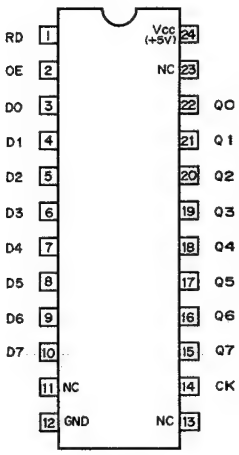

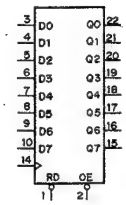

EACH FLIP–FLOP				
INPUTS				OUT
OE	RD	CK	D	Q
0	0	↑	X	0
0	1	↑	1	1
0	1	↑	0	0
0	1	0	X	Q_0
1	X	X	X	Z

0 ; LOW LEVEL
1 ; HIGH LEVEL
↑ ; TRANSITION FROM LOW TO HIGH
X ; DON'T CARE
Z ; HIGH–IMPEDANCE
OE ; OUTPUT ENABLE
RD ; RESET DATA

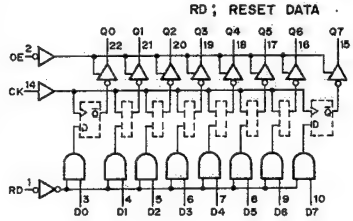

SN74ALS640AN (TI)
SN74LS640N (TI)

TTL BILATERAL SCHMITT TRIGGER BUS TRANSCEIVERS INVERTER WITH 3-STATE OUTPUT
– TOP VIEW –

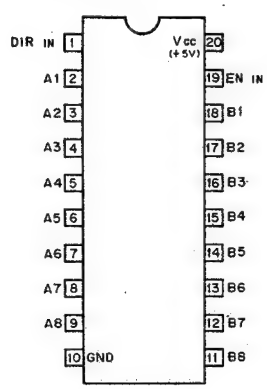

EN	DIR	OPERATION
0	0	B to A
0	1	A to B
1	X	HI–Z

0; LOW LEVEL
1; HIGH LEVEL
X; DON'T CARE,
HI-Z; HIGH IMPEDANCE

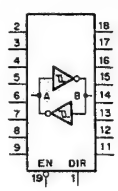

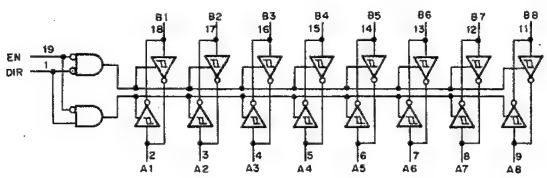

SN74ALS645AN (TI)

TTL BILATERAL SCHMITT TRIGGER BUS TRANSCEIVERS WITH 3-STATE OUTPUT
– TOP VIEW –

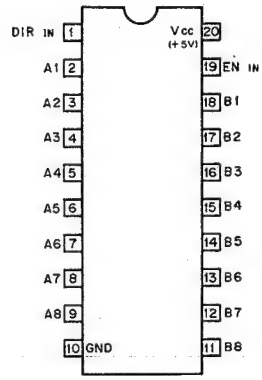

EN	DIR	OPERATION
0	0	B to A
0	1	A to B
1	X	HI–Z

0; LOW LEVEL
1; HIGH LEVEL
X; DON'T CARE,
HI-Z; HIGH IMPEDANCE

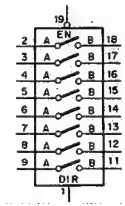

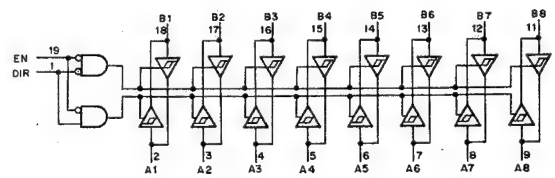

SN74ALS688N (TI)

TTL 8-BIT MAGNITUDE COMPARATOR
– TOP VIEW –

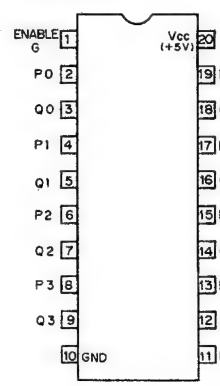

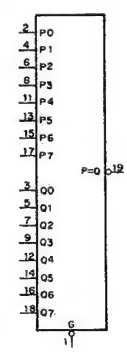

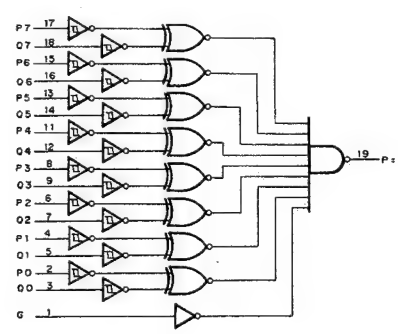

INPUTS		OUTPUT
P, Q	G	P=Q
P=Q	0	0
P>Q	0	1
P<Q	0	1
X	1	1

0; LOW LEVEL
1; HIGH LEVEL
X; DON'T CARE

SN74ALS874NT (TI)

TTL DUAL 4-BIT D-TYPE EDGE-TRIGGERED FLIP-FLOPS
– TOP VIEW –

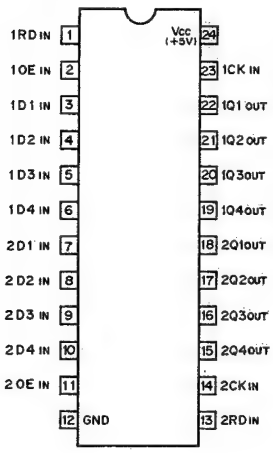

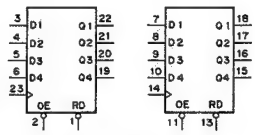

INPUTS				OUTPUT
OE	RD	CK	D	Q
0	0	X	X	0
0	1	↑	1	1
0	1	↑	0	0
0	1	0	X	Q_0
1	X	X	X	HI-Z

0;LOW LEVEL
1;HIGH LEVEL
X;DON'T CARE
HI-Z;HIGH IMPEDANCE

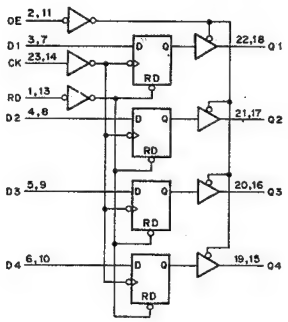

SN74HC04N (TI)
TC74ACT04P (TOSHIBA)
TC74HCT04AP (TOSHIBA)

C-MOS HEX INVERTER
– TOP VIEW –

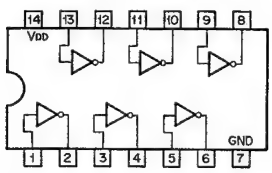

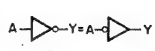

$Y = \overline{A}$

A	Y
0	1
1	0

0:LOW LEVEL
1:HIGH LEVEL

NOTE :

TYPE	VDD
74ACT04 TYPES 74HCT04 TYPES	+5V
TC74AC04F	+2 to +5.5V
TC74ACT04F	+4.5 to +5.5V
OTHER TYPES	+2 to +6V

SN74HC10N (TI)

C-MOS 3-INPUT NAND GATE
– TOP VIEW –

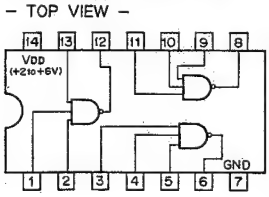

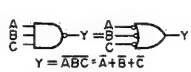

$Y = \overline{ABC} = \overline{A}+\overline{B}+\overline{C}$

A	B	C	Y
0	0	0	1
0	0	1	1
0	1	0	1
0	1	1	1
1	0	0	1
1	0	1	1
1	1	0	1
1	1	1	0

0 : LOW LEVEL
1 : HIGH LEVEL

SN74HC132N (TI)

C-MOS 2-INPUT NAND SCHMITT TRIGGER
– TOP VIEW –

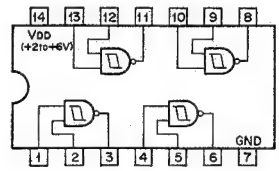

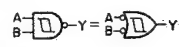

$Y = \overline{A \cdot B} = \overline{A}+\overline{B}$

A	B	Y
0	0	1
0	1	1
1	0	1
1	1	0

0 ; LOW LEVEL
1 ; HIGH LEVEL

SN74HC133N (TI)

C-MOS 13-INPUT NAND GATE
– TOP VIEW –

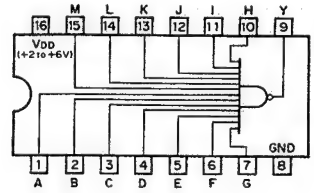

$Y = \overline{A \cdot B \cdot C \cdot D \cdot E \cdot F \cdot G \cdot H \cdot I \cdot J \cdot K \cdot L \cdot M}$

SN74HC138N (TI)

C-MOS 3-TO-8 LINE DECODER/DEMULTIPLEXER
– TOP VIEW –

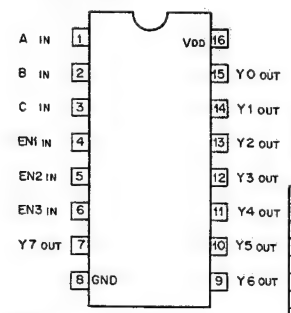

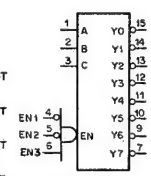

INPUTS				OUTPUTS							
EN	C	B	A	Y7	Y6	Y5	Y4	Y3	Y2	Y1	Y0
0	X	X	X	1	1	1	1	1	1	1	1
1	0	0	0	1	1	1	1	1	1	1	0
1	0	0	1	1	1	1	1	1	1	0	1
1	0	1	0	1	1	1	1	1	0	1	1
1	0	1	1	1	1	1	1	0	1	1	1
1	1	0	0	1	1	1	0	1	1	1	1
1	1	0	1	1	1	0	1	1	1	1	1
1	1	1	0	1	0	1	1	1	1	1	1
1	1	1	1	0	1	1	1	1	1	1	1

NOTE :

TYPE	VDD
74AC/74HC	+2 to +6V
74ACT/74HCT	+5V
TC74AC138F	+2 to +5.5V

$EN = \overline{EN1} \cdot \overline{EN2} \cdot EN3$

0 ; LOW LEVEL
1 ; HIGH LEVEL
X ; DON'T CARE

SN74HC14N (TI)

C-MOS SCHMITT TRIGGER INVERTER
– TOP VIEW –

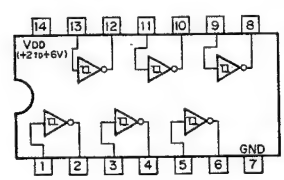

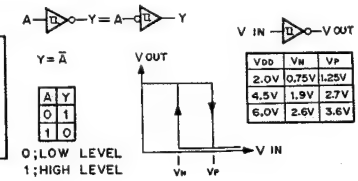

A	Y
0	1
1	0

0;LOW LEVEL
1;HIGH LEVEL

VDD	VM	VP
2.0V	0.75V	1.25V
4.5V	1.9V	2.7V
6.0V	2.6V	3.6V

SN74HC174N (TI)

C-MOS D-TYPE FLIP-FLOP WITH RESET
– TOP VIEW –

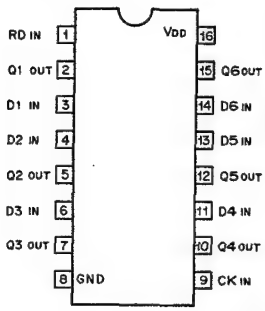

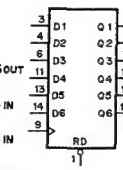

EACH FLIP-FLOP

INPUT			OUT
RD	CK	D	Q
0	X	X	0
1	↑	0	0
1	↑	1	1
1	0	X	Q0

0 ; LOW LEVEL
1 ; HIGH LEVEL
X ; DON'T CARE

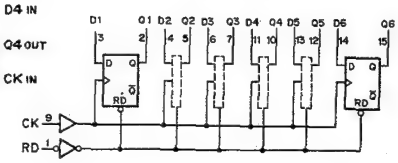

NOTE :

TYPE	VDD
74AC	+3.3 to +5V
74ACT	+5V
74HC	+2 to +6V
TC74AC174F	+2 to +5.5V

SN74HC374N (TI)
SN74HCT374N (TI)

C-MOS 3-STATE OCTAL D-TYPE FLIP-FLOP
– TOP VIEW –

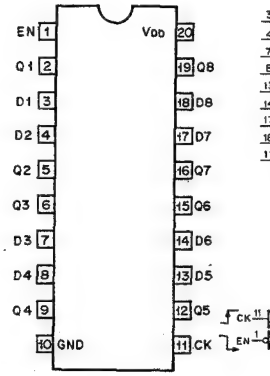

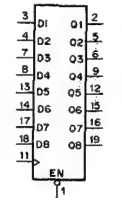

INPUTS			OUT
EN	D	CK	Q
0	1	↑	1
0	0	↑	0
0	X	0	Q0
1	X	X	HI-Z

0 ; LOW LEVEL
1 ; HIGH LEVEL
X ; DON'T CARE
HI-Z ; HIGH IMPEDANCE

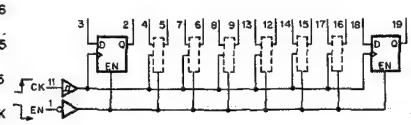

NOTE :

TYPE	VDD
74AC/74HC	+2 to +6V
74ACT/74HCT	+5V

SN74HC240N (TI)
SN74HCT240N (TI)

C-MOS 3-STATE INVERTER/LINE DRIVER
– TOP VIEW –

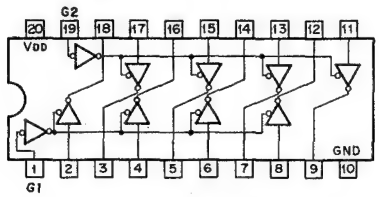

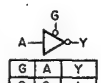

G	A	Y
0	0	1
0	1	0
1	X	HI-Z

0 ; LOW LEVEL
1 ; HIGH LEVEL
X ; DON'T CARE
HI-Z ; HIGH IMPEDANCE

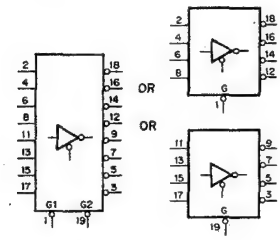

NOTE :

TYPE	VDD
74AC/74HC	+2 to +6V
74ACT/74HCT	+5V
TC74AC240F TC74AC240P	+2 to +5.5V

SN74HC4024N (TI)

C-MOS 7-BIT BINARY COUNTERS
– TOP VIEW –

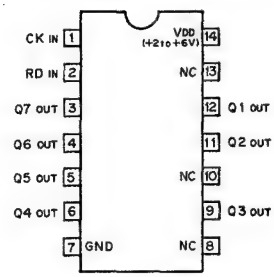

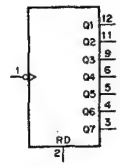

COUNT	INPUTS		OUTPUTS						
	CK	RD	Q7	Q6	Q5	Q4	Q3	Q2	Q1
0	X	1	0	0	0	0	0	0	0
1	↓	0	0	0	0	0	0	0	1
2	↓	0	0	0	0	0	0	1	0
3	↓	0	0	0	0	0	0	1	1
125	↓	0	1	1	1	1	1	0	1
126	↓	0	1	1	1	1	1	1	0
127	↓	0	1	1	1	1	1	1	1
–	0	0	NO CHANGE						
–	1	0							

0 ; LOW LEVEL
1 ; HIGH LEVEL
X ; DON'T CARE

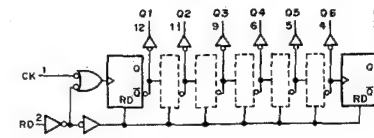

SN74HC273N (TI)

C-MOS D-TYPE FLIP-FLOP WITH RESET
– TOP VIEW –

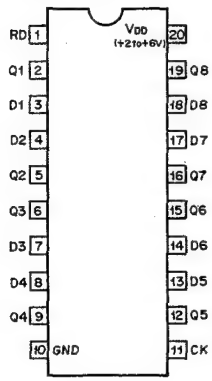

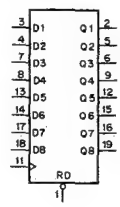

EACH FLIP-FLOP

INPUT			OUT
RD	CK	D	Q
0	X	X	0
1	↑	0	0
1	↑	1	1
1	0	X	Q0

0 ; LOW LEVEL
1 ; HIGH LEVEL
X ; DON'T CARE

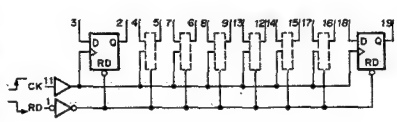

SN74HC574N (TI)

C-MOS 3-STATE D-TYPE EDGE-TRIGGERED FLIP-FLOP
– TOP VIEW –

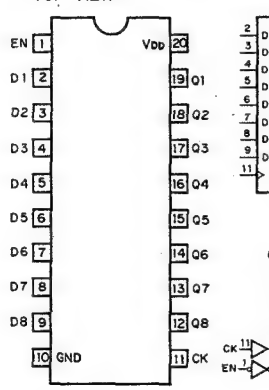

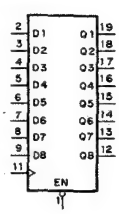

EACH FLIP-FLOP

INPUTS			OUT
EN	CK	D	Q
0	↑	1	1
0	↑	0	0
0	0	X	Q0
1	X	X	HI-Z

0 ; LOW LEVEL
1 ; HIGH LEVEL
X ; DON'T CARE
HI-Z ; HIGH IMPEDANCE
Q0 ; NO CHANGE

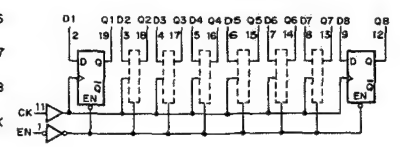

NOTE :

TYPE	VDD
74AC/74HC	+2 to +6V
74HCT	+5V
TC74AC574F	+2 to +5.5V

SN74HC688N (TI)

C-MOS 8-BIT MAGNITUDE COMPARATOR
– TOP VIEW –

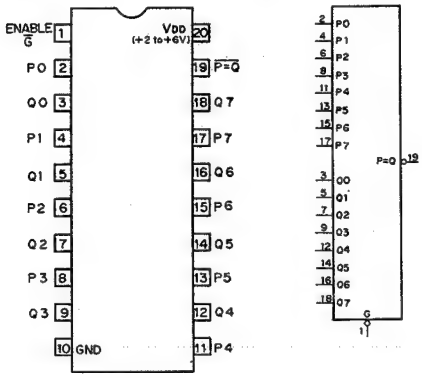

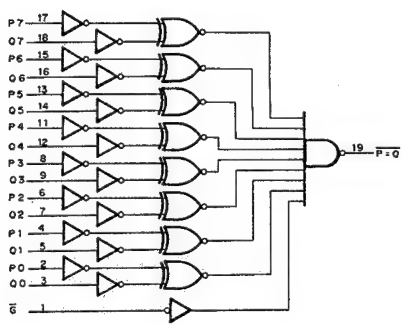

INPUTS		OUTPUT
P, Q	$\overline{G}$	P = Q
P=Q	0	0
P>Q	0	1
P<Q	0	1
X	1	1

0; LOW LEVEL
1; HIGH LEVEL
X; DON'T CARE

SN74LS125AN (TI)

TTL BUS BUFFER GATES WITH 3-STATE OUTPUTS
– TOP VIEW –

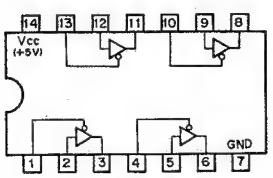

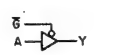

$\overline{G}$	A	Y
0	0	0
0	1	1
1	X	HI-Z

0; LOW LEVEL X; DON'T CARE
1; HIGH LEVEL HI-Z; HIGH IMPEDANCE

TD62083AP (TOSHIBA)

DARLINGTON DRIVER
– TOP VIEW –

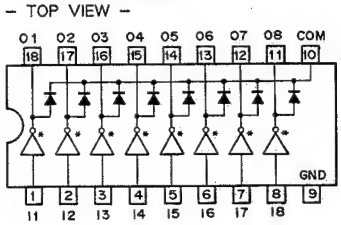

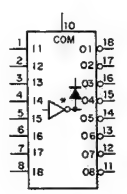

*; OPEN COLLECTOR

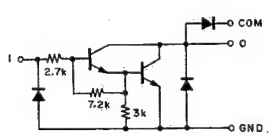

SN74LS682N (TI)

TTL 8-BIT MAGNITUDE COMPARATOR
WITH TOTEM-POLE OUTPUTS
– TOP VIEW –

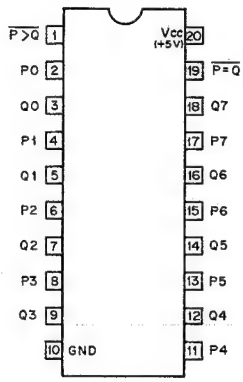

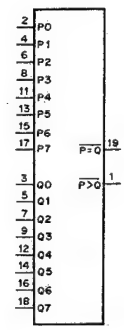

DATA INPUTS		OUTPUTS	
P0 - P7	Q0 - Q7	$\overline{P=Q}$	$\overline{P>Q}$
P=Q		0	1
P>Q		1	0
P<Q		1	1

1; HIGH LEVEL
0; LOW LEVEL

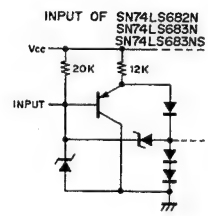

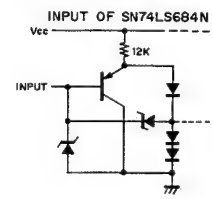

TMC2111B2C (TRW)

C-MOS VARIABLE-LENGTH SHIFT REGISTER
– TOP VIEW –

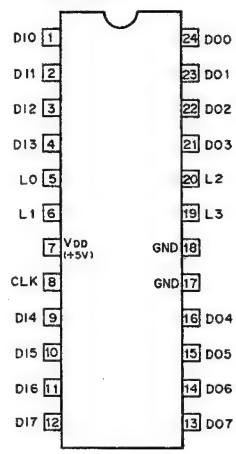

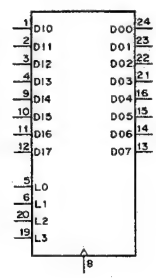

CLK ; CLOCK
DI0-DI7 ; DATA INPUTS
DO0-DO7 ; DATA OUTPUTS
L0-L3 ; LENGTH SELECT INPUTS

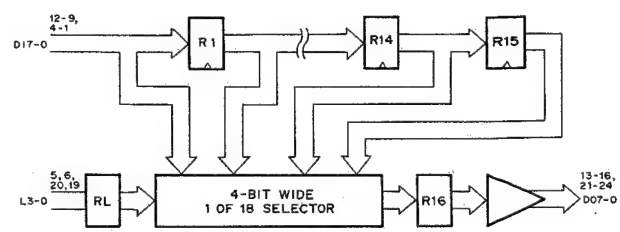

TMS27C256-15JL (TI)

C-MOS 256K(32Kx8)-BIT ERASABLE PROM WITH 3-STATE OUTPUTS
– TOP VIEW –

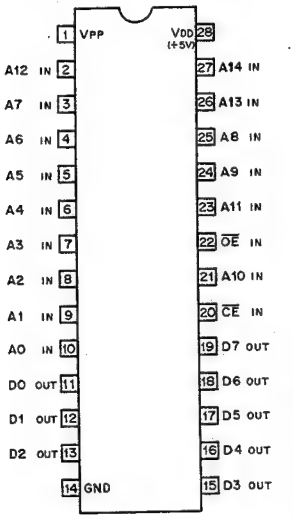

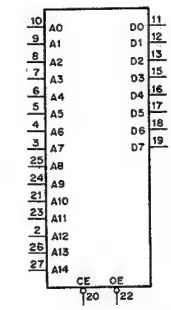

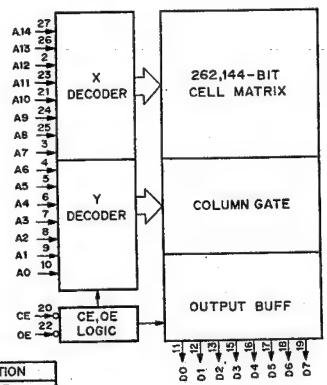

A0 – A14 : ADDRESS INPUT
$\overline{CE}$: CHIP ENABLE INPUT
D0 – D7 : DATA OUTPUT
$\overline{OE}$: OUTPUT ENABLE INPUT
V_{PP} : PROGRAM POWER SUPPLY

An	$\overline{CE}$	$\overline{OE}$	V_{PP}	Dn	FUNCTION
An	0	0	+ 5V	D_{OUT}	READ
An	0	1	+ 5V	HI-Z	OUTPUT DISABLE
X	1	X	+ 5V	HI-Z	STANDBY
An	0	1	+ 21V	D_{IN}	PGM
An	0	0	+ 21V	D_{OUT}	PGM VERIFY
X	1	1	+ 21V	HI-Z	PGM INH

0 : LOW LEVEL
1 : HIGH LEVEL
X : DON'T CARE
HI-Z : HIGH IMPEDANCE

TMS27C512-20JL (TI)

C-MOS 512K(65,536x8 = 524,288)-BIT ERASABLE PROM
– TOP VIEW –

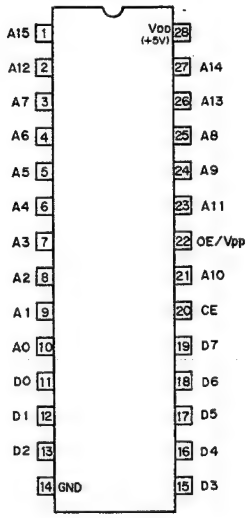

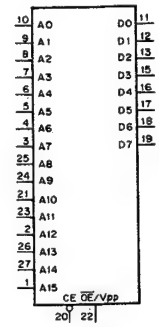

A0 – A15 : ADDRESS INPUTS
CE : CHIP ENABLE INPUT
D0 – D7 : DATA OUTPUTS
OE : OUTPUT ENABLE INPUT
V_{PP} : PROGRAM POWER SUPPLY

An	CE	$\overline{OE}/V_{PP}$	Vpp	Dn	FUNCTION
A_{IN}	0	0	+5V	D_{OUT}	READ
A_{IN}	0	1	+5V	HI-Z	OUTPUT DISABLE
X	1	X	+5V	HI-Z	STANDBY
A_{IN}	0	+12.5V	+6V	D_{IN}	PGM
A_{IN}	0	0	+6V	D_{OUT}	PGM VERIFY
X	1	+12.5V	+6V	HI-Z	PGM INH

0 : LOW LEVEL
1 : HIGH LEVEL
X : DON'T CARE
HI-Z : HIGH IMPEDANCE

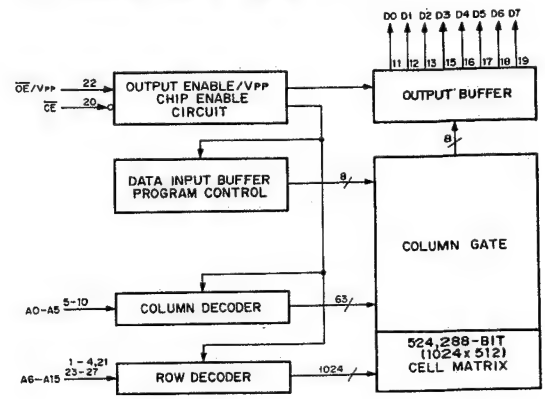

uPD42101C-3 (NEC)

C-MOS 7K (910x8)-BIT FIFO MEMORY
– TOP VIEW –

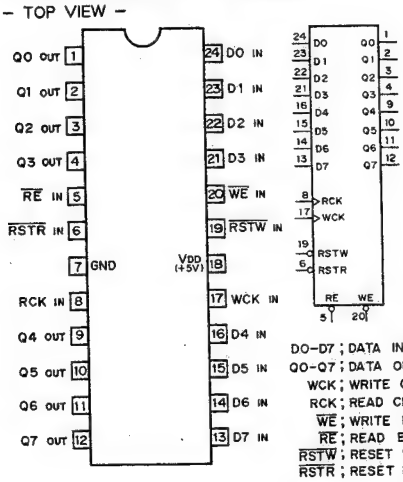

DO–D7 ; DATA INPUTS
QO–Q7 ; DATA OUTPUTS
WCK ; WRITE CLOCK INPUT
RCK ; READ CLOCK INPUT
$\overline{WE}$; WRITE ENABLE INPUT
$\overline{RE}$; READ ENABLE INPUT
$\overline{RSTW}$; RESET WRITE INPUT
$\overline{RSTR}$; RESET READ INPUT

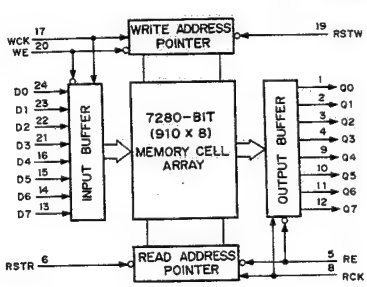

uPD71051C – 10 (NEC)

C-MOS SERIAL CONTROL UNIT

– TOP VIEW –

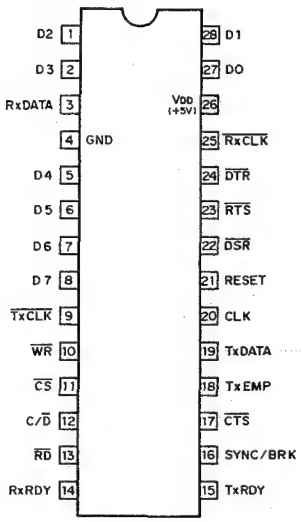

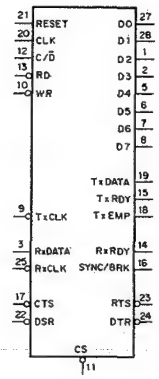

CLK	:CLOCK
$\overline{CS}$	:CHIP SELECT
$\overline{CTS}$	:CLEAR TO SEND
C/$\overline{D}$	:CONTROL OR DATA
D0-7	:DATA BUS
$\overline{DSR}$	:DATA SET READY
$\overline{DTR}$	:DATA TERMINAL READY
$\overline{RD}$	:READ STROBE
RESET	:RESET
$\overline{RTS}$	:REQUEST TO SEND
$\overline{RXCLK}$	:RECEIVER CLOCK
RXDATA	:RECEIVE DATA
RXRDY	:RECEIVER READY
SYNC/$\overline{BRK}$	:SYNCRONIZATION/BREAK
$\overline{TXCLK}$	:TRANSMITTER CLOCK
TXDATA	:TRANSMIT DATA
TXEMP	:TRANSMITTER EMPTY
$\overline{TXRDY}$	:TRANSMITTER READY
$\overline{WR}$	:WRITE STROBE

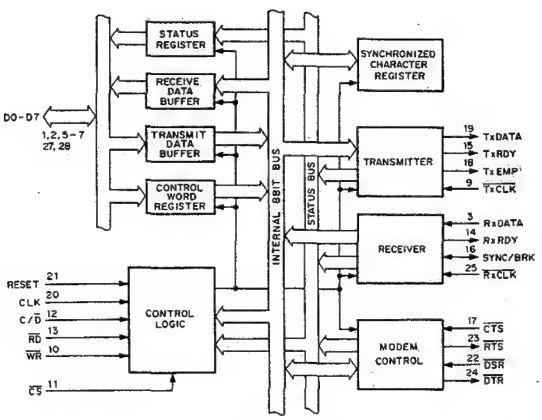

$\overline{CS}$	$\overline{RD}$	$\overline{WR}$	C/$\overline{D}$	MODE	FUNCTION
0	0	1	0	RECEIVE DATA BUFFER--> DATA BUS	READ RECEIVE DATA
0	0	1	1	STATUS REGISTER--> DATA BUS	READ STATUS
0	1	0	0	DATA BUS--> TRANSMIT DATA BUFFER	WRITE RECEIVE DATA
0	1	0	1	DATA BUS--> CONTROL WORD REGISTER	WRITE CONTROL WORD
0	1	1	X	DATA BUS:HIGH IMPEDANCE	
1	X	X	X	DATA BUS:HIGH IMPEDANCE	

1:HIGH LEVEL
0:LOW LEVEL
X:DON'T CARE

UPD71054C-10 (NEC)

C-MOS PROGRAMMABLE TIMER COUNTER

– TOP VIEW –

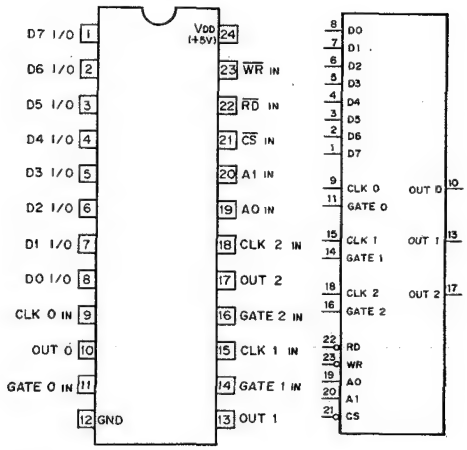

FUNCTION TABLE

INPUTS					FUNCTION
CS	RD	WR	A1	AO	
0	1	0	0	0	Load Counter No. 0
0	1	0	0	1	Load Counter No. 1
0	1	0	1	0	Load Counter No. 2
0	1	0	1	1	Control Word
0	0	1	0	0	Read Counter 0
0	0	1	0	1	Read Counter 1
0	0	1	1	0	Read Counter 2
0	0	1	1	1	No-Operation (HI-Z)
1	X	X	X	X	Disable (HI-Z)
0	1	1	X	X	No-Operation (HI-Z)

A0, A1	: COUNTER SELECT INPUTS
CLK 0 – 2	: COUNTER CLOCK INPUTS
CS	: CHIP SELECT INPUT
D0 – D7	: 8-BIT DATA INPUTS/OUTPUTS
GATE 0 – 2	: COUNTER GATE INPUTS
OUT 0 – 2	: COUNTER OUTPUTS
RD	: READ COUNTER INPUT
WR	: WRITE CMD OR DATA INPUT

0;LOW LEVEL
1;HIGH LEVEL
X;DON'T CARE
HI-Z;HIGH IMPEDANCE

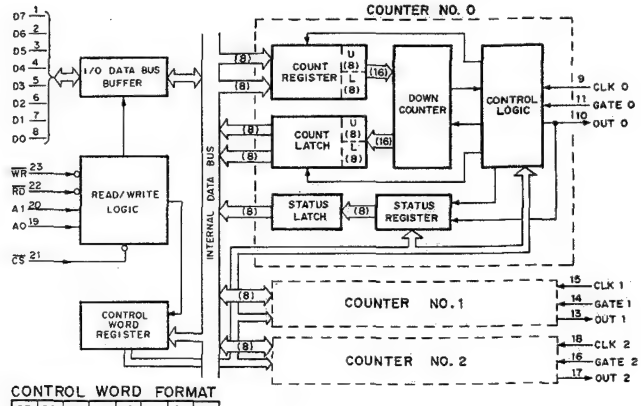

CONTROL WORD FORMAT

D7	D6	D5	D4	D3	D2	D1	DO
SC1	SCO	RL1	RLO	M2	M1	MO	BCD

BCD	OPERATION
0	16-BIT BINARY
1	BCD(4-DECADE)

M2	M1	MO	MODE
0	0	0	0
0	0	1	1
X	1	0	2
X	1	1	3
1	0	0	4
1	0	1	5

RL1	RLO	OPERATION
0	0	COUNTER LATCHING
0	1	READ/LOAD LSB ONLY
1	0	READ/LOAD MSB ONLY
1	1	LSB FIRST THEN MSB

SC1	SCO	SELECTED COUNTER
0	0	COUNTER No. 0
0	1	COUNTER No. 1
1	0	COUNTER No. 2
1	1	MULTIPLE LATCH CMD

μPD72001C (NEC)

C-MOS ADVANCED MULTI-PROTOCOL SERIAL CONTROLLER
– TOP VIEW –

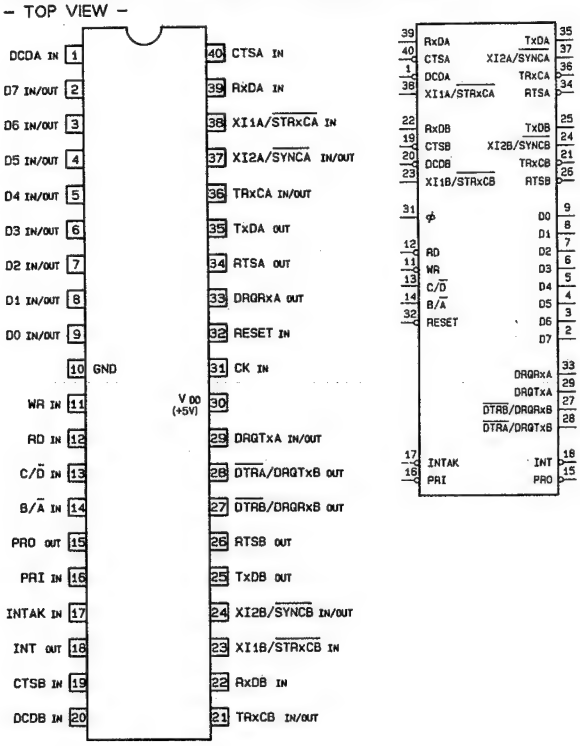

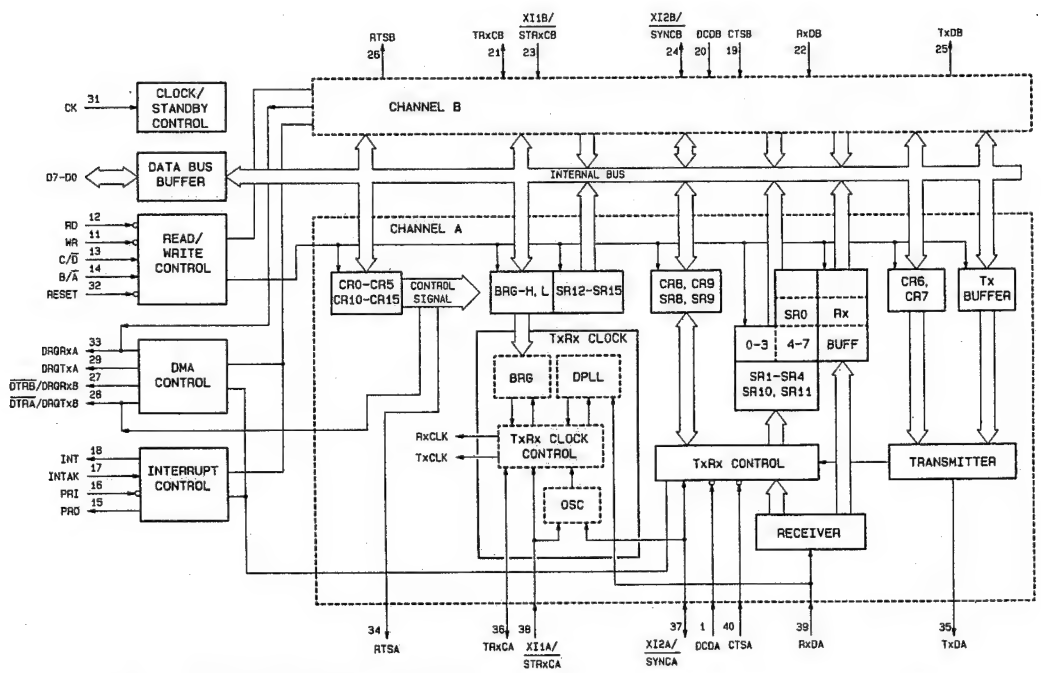

INPUTS				FUNCTION	
WR	RD	B/A	C/D		
0	1	0	0	CHANNEL A	WRITE (TxD)
		1		CHANNEL B	
1	0	0	0	CHANNEL A	READ (RxD)
		1		CHANNEL B	
0	1	0	1	CHANNEL A	WRITE (CONTROL REGISTER)
		1		CHANNEL B	
1	0	0	1	CHANNEL A	READ (STATUS REGISTER)
		1		CHANNEL B	
1	1	X	X	HIGH-IMPEDANCE	
0	0	X	X	INHIBIT	

0: LOW LEVEL
1: HIGH LEVEL
X: DON'T CARE.

CK ; SYSTEM CLOCK INPUT
WR ; WRITE ENABLE INPUT
RD ; READ ENABLE INPUT
B/A ; CHANNEL B/A SELECT INPUT
C/D ; CONTROL/DATA SELECT INPUT
D0–D7 ; DATA BUS INPUTS/OUTPUTS
INT ; INTERRUPT OUTPUT
INTAK ; INTERRUPT ACKNOWLEDGE INPUT
PRI ; PRIORITY INPUT
DRQTxA; DMA REQUEST TxA OUTPUT
DRQRxA; DMA REQUEST RxA OUTPUT
PRO ; PRIORITY OUTPUT

DTRA/DRQTxB; DATA TERMINAL READY A/DMA REQUEST TxB OUTPUT
DTRB/DRQRxB; DATA TERMINAL READY B/DMA REQUEST RxB OUTPUT
CTSA, CTSB ; CLEAR TO SEND A/B INPUT
DCDA, DCDB ; DATA CARRIER DETECT A/B INPUT
RTSA, RTSB ; REQUEST TO SEND A/B OUTPUT
RESET ; RESET INPUT

V74ACT821PS (KANEMATSU)

C-MOS 10-BIT BUS INTERFACE FLIP-FLOPS WITH 3-STATE OUTPUTS
– TOP VIEW –

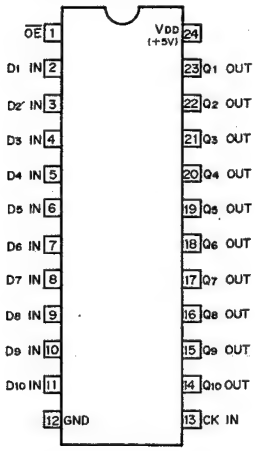

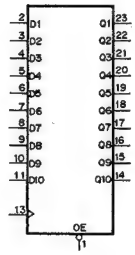

FUNCTION TABLE(EACH FLIP-FLOP)

INPUT			OUTPUT
OE	CK	D	Q
0	↑	1	1
0	↑	0	0
0	0	X	Qo
1	X	X	HI-Z

0 ; LOW LEVEL
1 ; HIGH LEVEL
X ; DON'T CARE
HI-Z ; HIGH IMPEDANCE

LOGIC DIAGRAM (POSITIVE LOGIC)

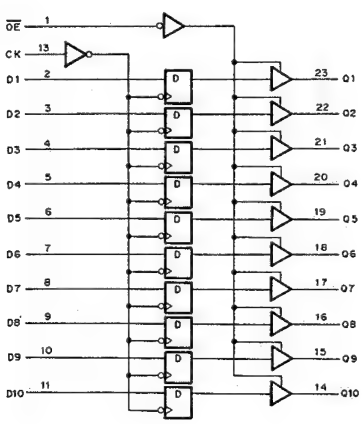

V74ACT827PS (KANEMATSU)

C-MOS 10-BIT BUFFERS AND LINE DRIVERS WITH 3-STATE OUTPUTS
– TOP VIEW –

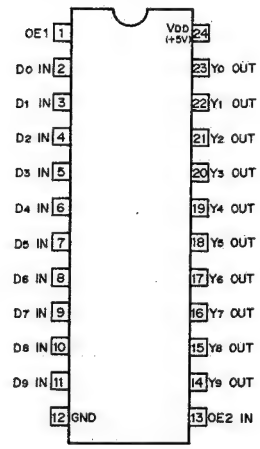

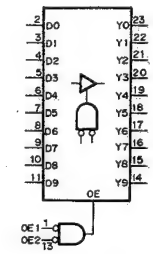

FUNCTION TABLE

INPUTS			OUTPUTS
OE1	OE2	D	Y
0	0	0	0
0	0	1	1
0	1	X	HI-Z
1	0	X	HI-Z
1	1	X	HI-Z

0 ; LOW LEVEL
1 ; HIGH LEVEL
X ; DON'T CARE
HI-Z ; HIGH IMPEDANCE

WS57C291B-45S (WSI)
WS57C291B-45T (WSI)

C-MOS 16K-BIT (2048x8) HIGH SPEED ERASABLE P-ROM
– TOP VIEW –

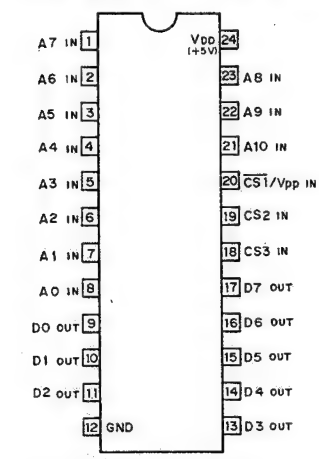

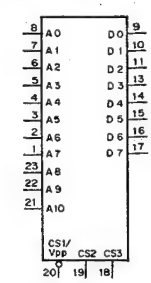

A0 – A12 : ADDRESS INPUTS
D0 – D7 : DATA OUTPUTS
CS1 – CS3 : CHIP SELECT INPUT
V_{PP} : PROGRAM POWER SUPPLY

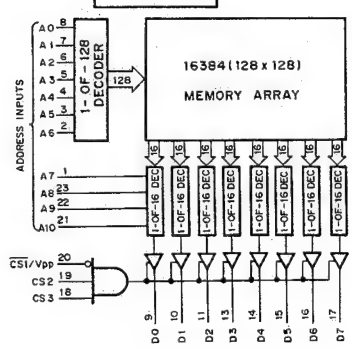

CHIP SEL			OUTPUT
CS1/V_{PP}	CS2	CS3	
0	1	1	ENABLE
1	0	X	HI-IMPEDANCE
1	X	0	

0 : LOW LEVEL
1 : HIGH LEVEL
X : DON'T CARE

WS27C010L-12D (WSI)

C-MOS 1M (131,072x8)-BIT UV ERASABLE PROM

– TOP VIEW –

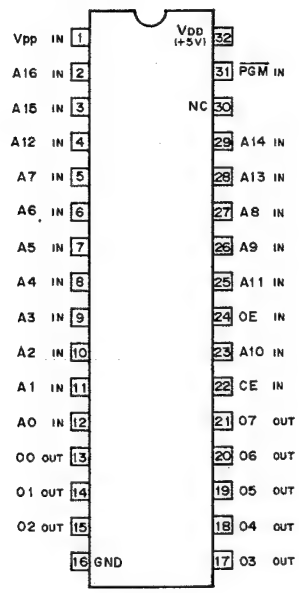

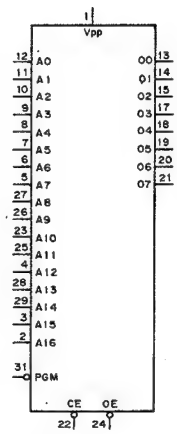

A0 – A16 ; ADDRESS INPUTS
D0 – D7 ; DATA OUTPUTS
CE ; CHIP ENABLE INPUT
OE ; OUTPUT ENABLE INPUT
PGM ; PROGRAM INPUT

< Diode >

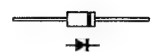

1SS119
S3S4M

SLR-320VC3 ; RED

TLG123A ; GREEN

< Transistor >

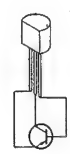

2SA952

等価回路はICメーカーのData Bookに従いました。

The circuit diagram of each IC is obtained from the IC data book published by the manufacturer.

SECTION 8
SCHEMATIC DIAGRAMS

回路図内において、REF.NOの近傍に下記記号が記載されていますが、これは生産時の部品データです。

In the schematic diagrams, the following marks are described nearby reference number. These are parts data at factory.

CAPACITOR(C)

AL, AS	ELECTROLYTIC
TA	TANTALUM
CA, CC, CCS, CM, CS	CERAMIC
MPS, PP, PS, PT	MYLAR
MD	DIPPED MICA
MS	MICA

RESISTOR(R)
VARIABLE RESISTOR(RV)

RC, RD	CARBON
RF	FUSE
RN, RS	METAL
RW	WIREWOUND

• CIRCUIT INFORMATION

Board	Function	PAGE
ALU – 11	Real-time Numeric Data Processor	8 – 4
CN – 456	Power Supply Connector Board	8 – 249
CN – 462	BNC Connector Board	8 – 253
CN – 463	D SUB Connector Board	8 – 257
CPU – 82	System Control and Communications	8 – 23
DLP – 9	Horizontal and Vertical Low Pass Filter	8 – 37
DLP – 10	IIR Vertical Low Pass Filter	8 – 82
DPR – 15	Input Pixel Effect Generator and Motion Detect	8 – 104
DPR – 16	Output Recursive Effect Generator and Border Generator	8 – 139
DPR – 17	Memory Address Selector and Write Address Generator	8 – 175
DPR – 18	Read Address Generator and Split Mirror Generator	8 – 201
LE – 76	Power LED Board	——
MB – 305	Mother Board	8 – 263
MEM – 41	3 Field Video Memory and Interpolator	8 – 228

• LOCATION OF PRINTED CIRCUIT BOARDS

〈POWER UNIT : TOP VIEW〉

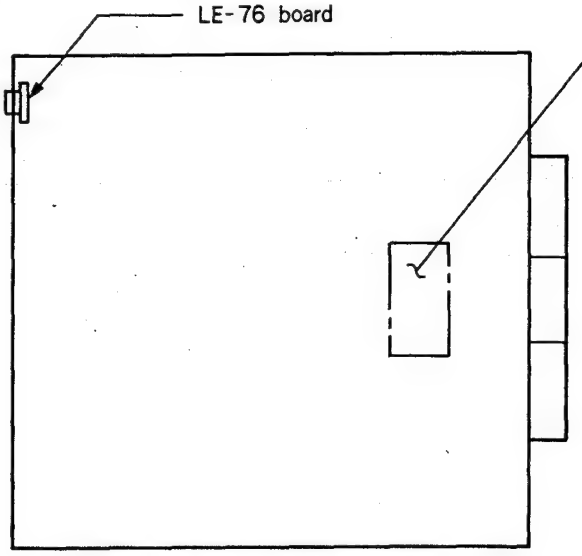

〈MAIN UNIT CHASSIS : TOP VIEW〉

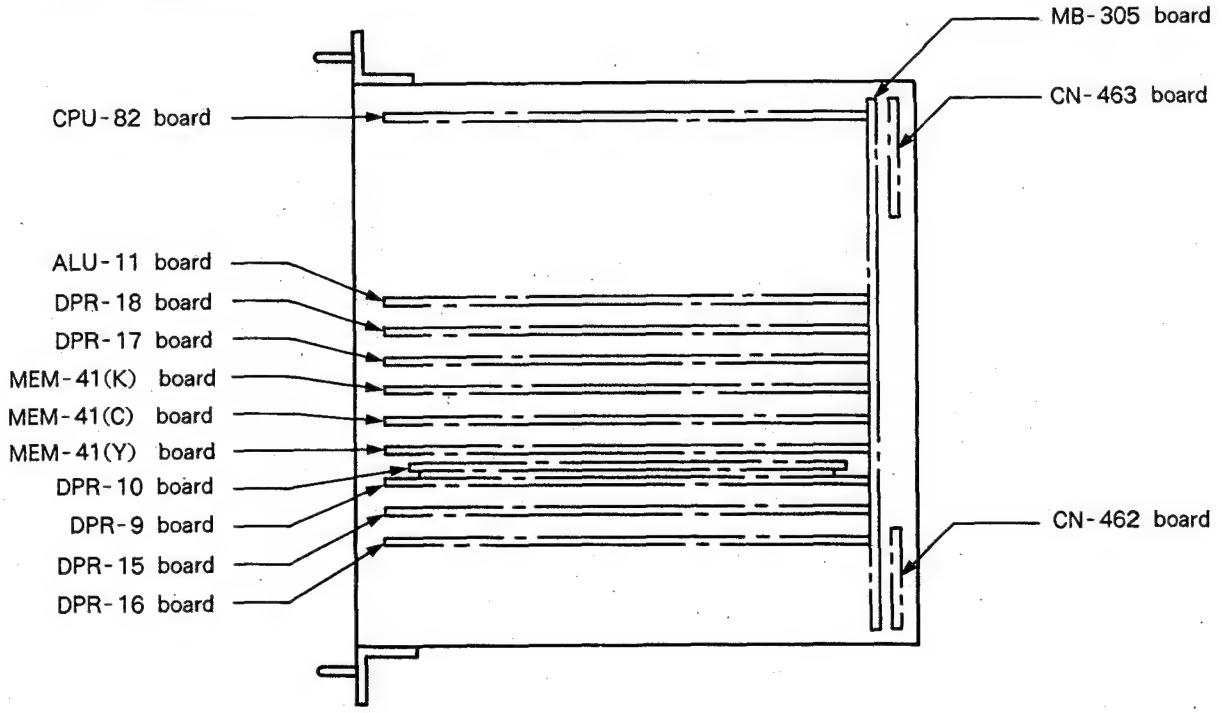

ALU-11(1/3) ALU-1

ALU-11;REALTIME NUMERIC DATA PROCESSOR

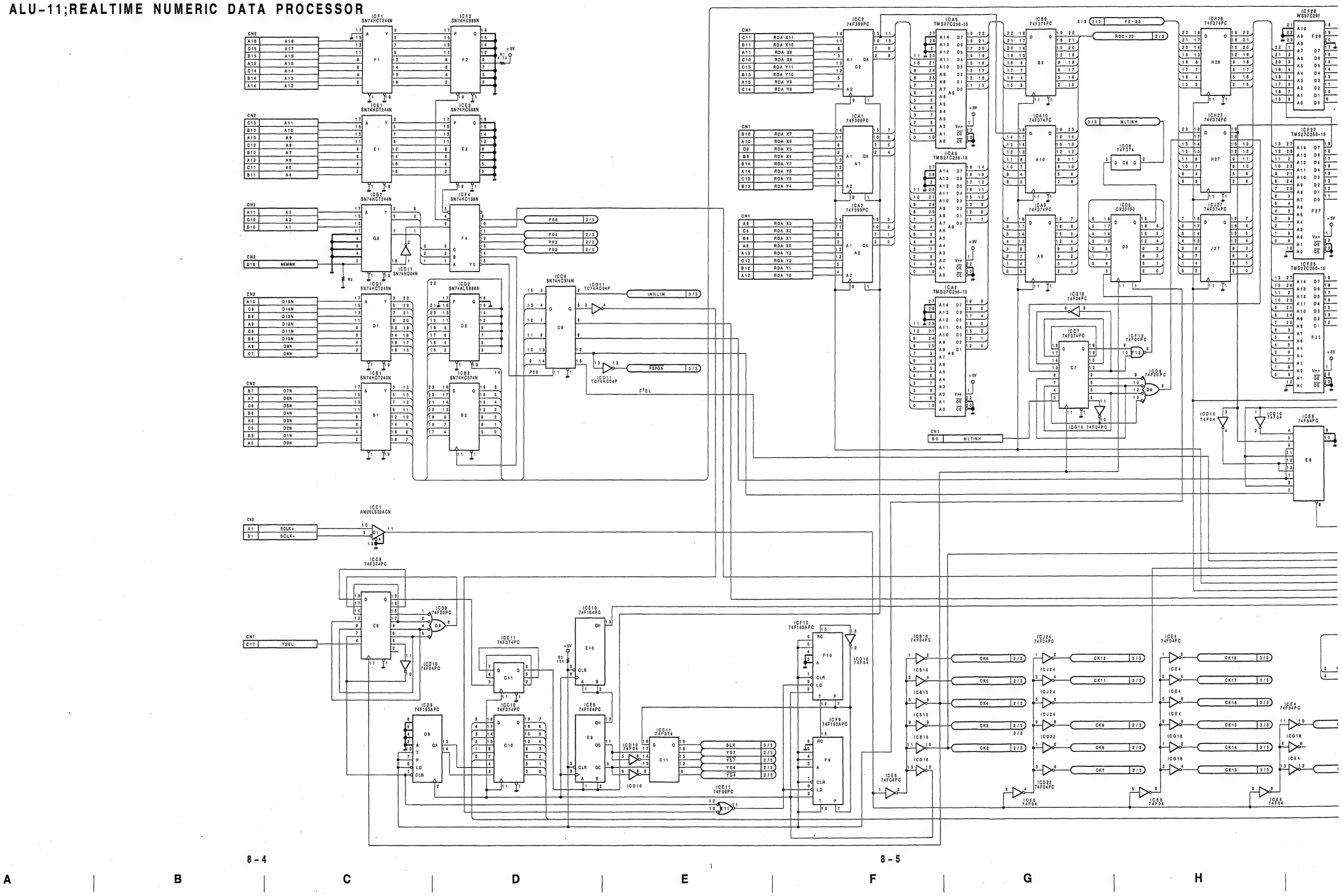

A B C D E F G H

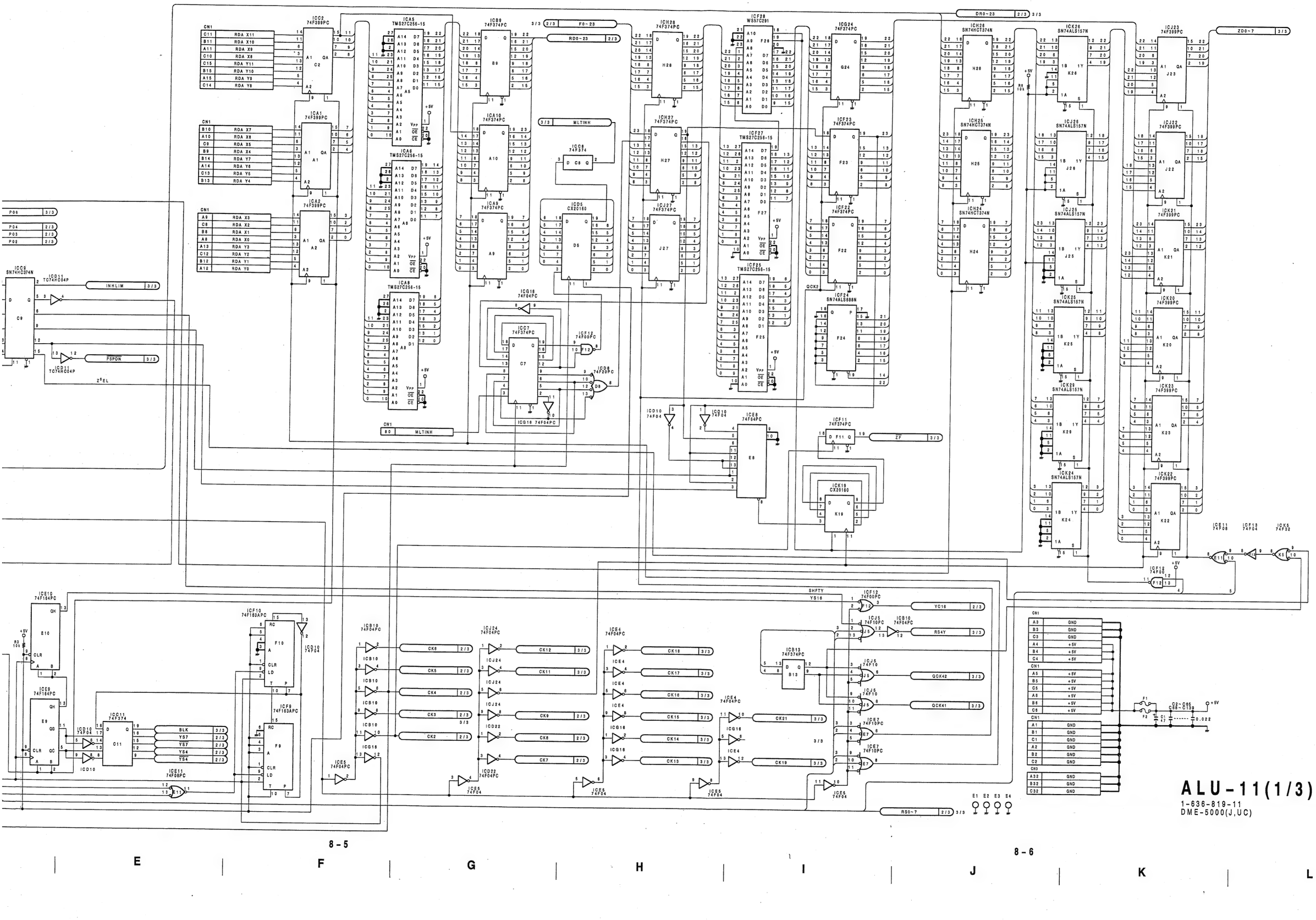
ALU-11(1/3)
1-636-819-11
DME-5000(J,UC)
8-5
8-6
E
F
G
H
I
J
K
L

SECTION 8
SCHEMATIC DIAGRAMS

回路図内において、REF.NOの近傍に下記記号が記載されていますが、これは生産時の部品データです。

In the schematic diagrams, the following marks are described nearby reference number. These are parts data at factory.

CAPACITOR(C)

AL, AS	ELECTROLYTIC
TA	TANTALUM
CA, CC, CCS, CM, CS	CERAMIC
MPS, PP, PS, PT	MYLAR
MD	DIPPED MICA
MS	MICA

RESISTOR(R)
VARIABLE RESISTOR(RV)

RC, RD	CARBON
RF	FUSE
RN, RS	METAL
RW	WIREWOUND

• CIRCUIT INFORMATION

Board	Function	PAGE
ALU – 11	Real-time Numeric Data Processor	8 – 4
CN – 456	Power Supply Connector Board	8 – 249
CN – 462	BNC Connector Board	8 – 253
CN – 463	D SUB Connector Board	8 – 257
CPU – 82	System Control and Communications	8 – 23
DLP – 9	Horizontal and Vertical Low Pass Filter	8 – 37
DLP – 10	IIR Vertical Low Pass Filter	8 – 82
DPR – 15	Input Pixel Effect Generator and Motion Detect	8 – 104
DPR – 16	Output Recursive Effect Generator and Border Generator	8 – 139
DPR – 17	Memory Address Selector and Write Address Generator	8 – 175
DPR – 18	Read Address Generator and Split Mirror Generator	8 – 201
LE – 76	Power LED Board	——
MB – 305	Mother Board	8 – 263
MEM – 41	3 Field Video Memory and Interpolator	8 – 228

e number.

• CIRCUIT INFORMATION

Board	Function	PAGE
ALU – 11	Real-time Numeric Data Processor	8 – 4
CN – 456	Power Supply Connector Board	8 – 249
CN – 462	BNC Connector Board	8 – 253
CN – 463	D SUB Connector Board	8 – 257
CPU – 82	System Control and Communications	8 – 23
DLP – 9	Horizontal and Vertical Low Pass Filter	8 – 37
DLP – 10	IIR Vertical Low Pass Filter	8 – 82
DPR – 15	Input Pixel Effect Generator and Motion Detect	8 – 104
DPR – 16	Output Recursive Effect Generator and Border Generator	8 – 139
DPR – 17	Memory Address Selector and Write Address Generator	8 – 175
DPR – 18	Read Address Generator and Split Mirror Generator	8 – 201
LE – 76	Power LED Board	——
MB – 305	Mother Board	8 – 263
MEM – 41	3 Field Video Memory and Interpolator	8 – 228

• LOCATION OF PRINTED CIRCUIT BOARDS

〈POWER UNIT : TOP VIEW〉

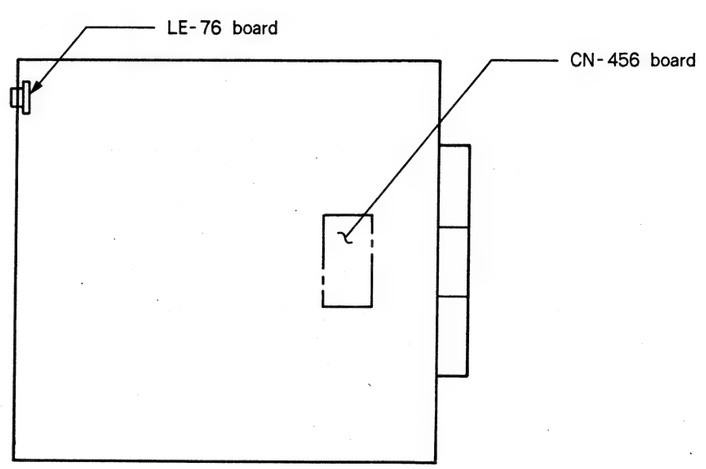

〈MAIN UNIT CHASSIS : TOP VIEW〉

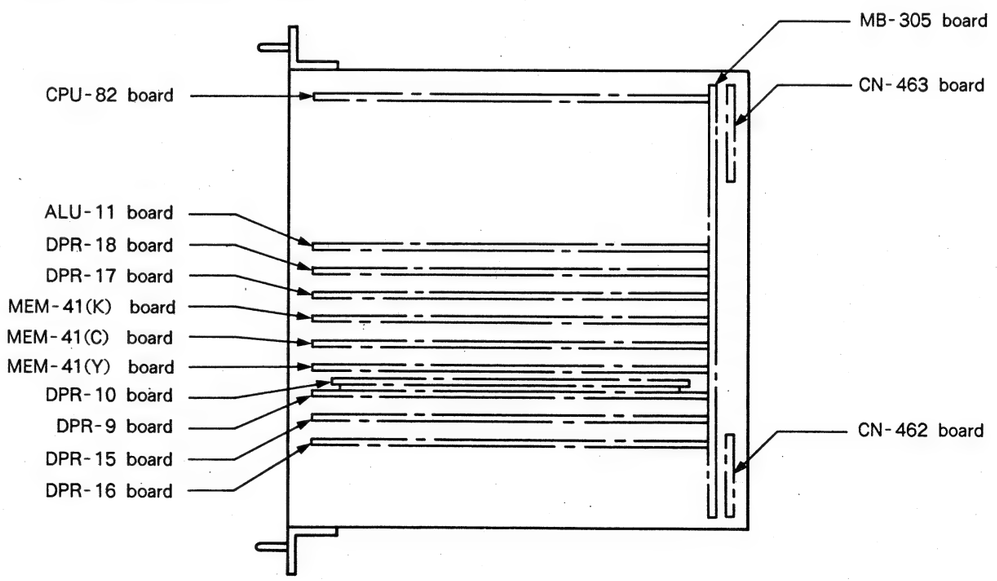

ALU-11;REALTIME NUMERIC DATA PROCESSOR

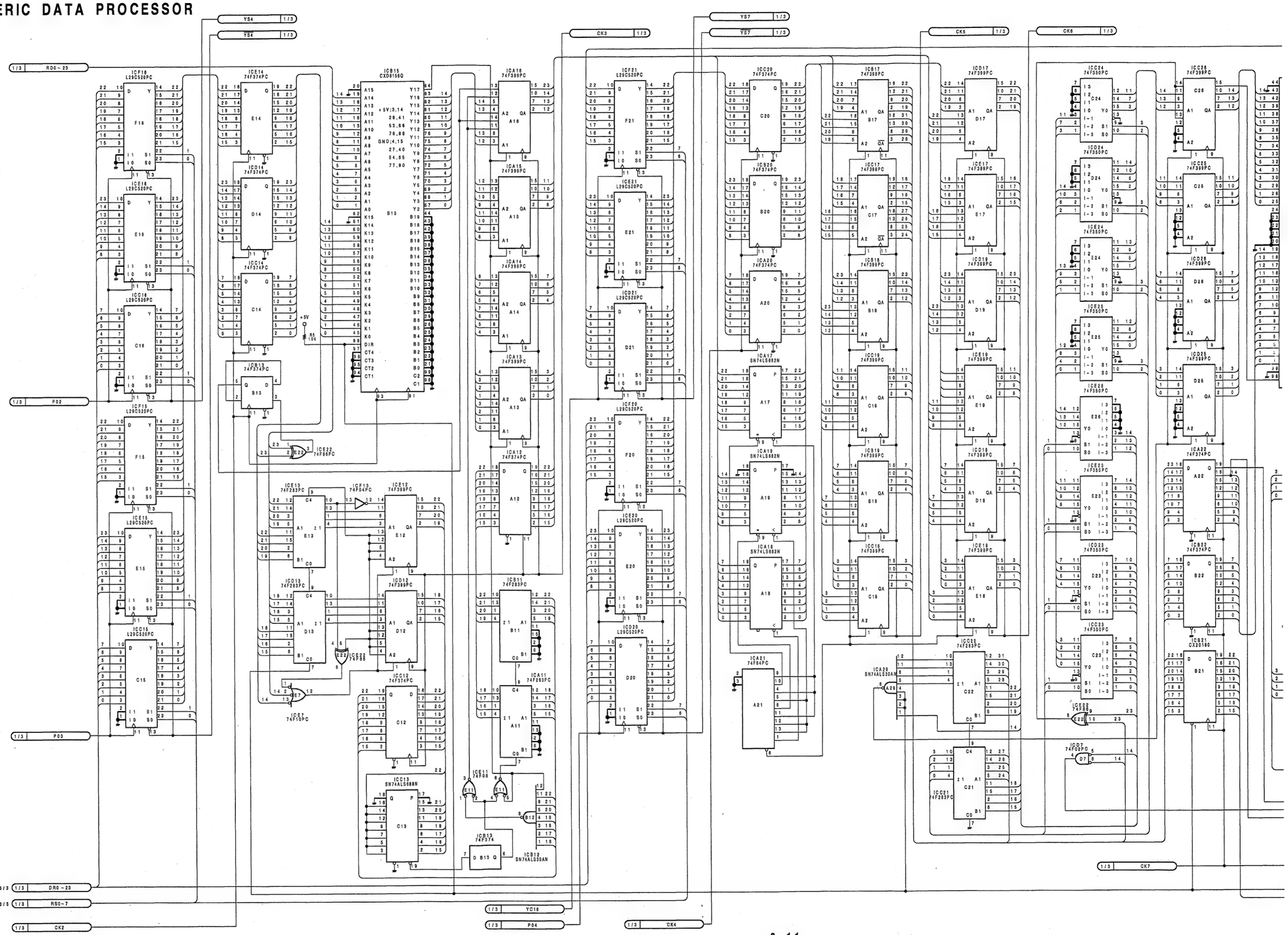

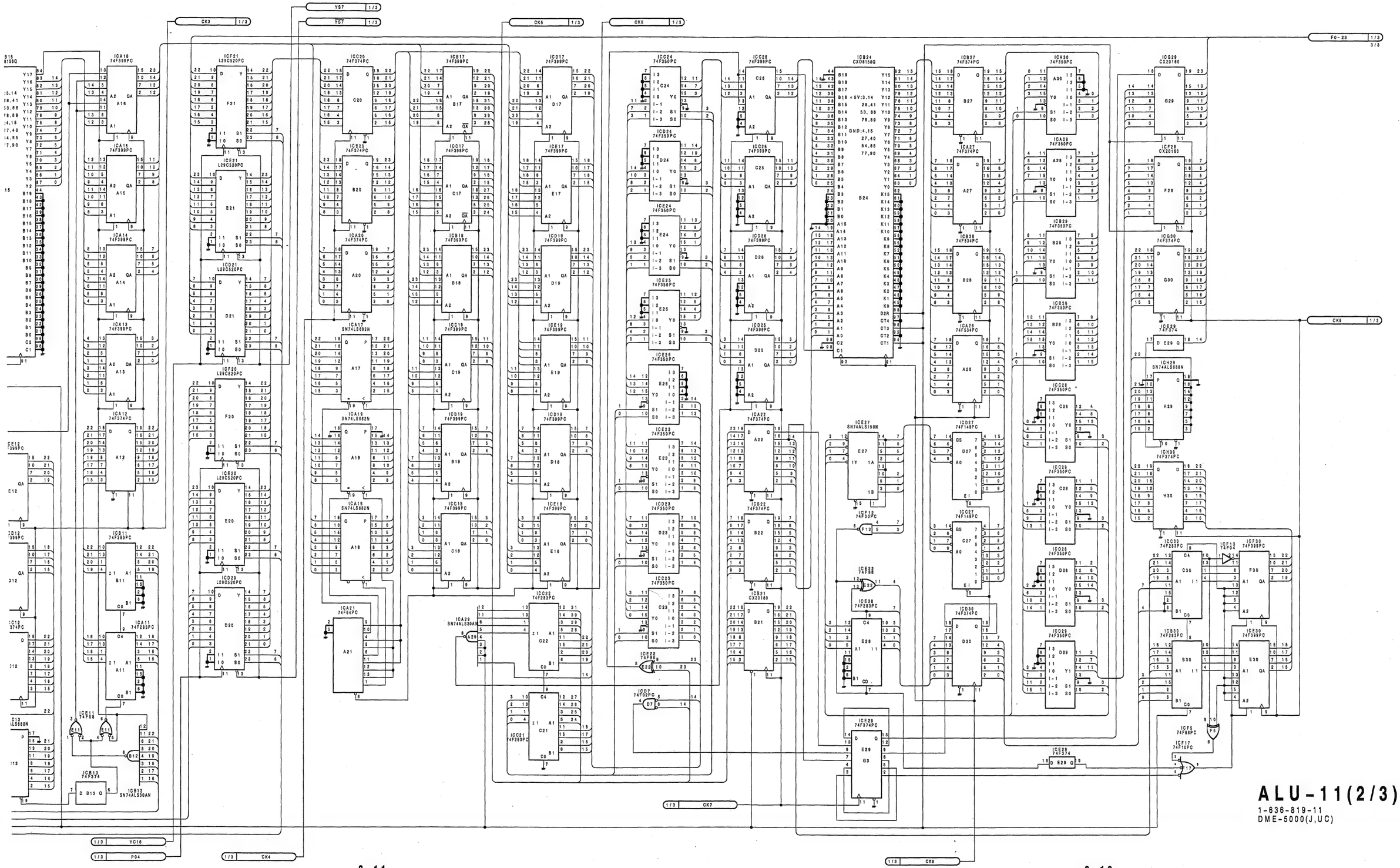

ALU-11(2/3)
1-636-819-11
DME-5000(J,UC)

ALU-11(3/3) ALU-1

ALU-11;REALTIME NUMERIC DATA PROCESSOR

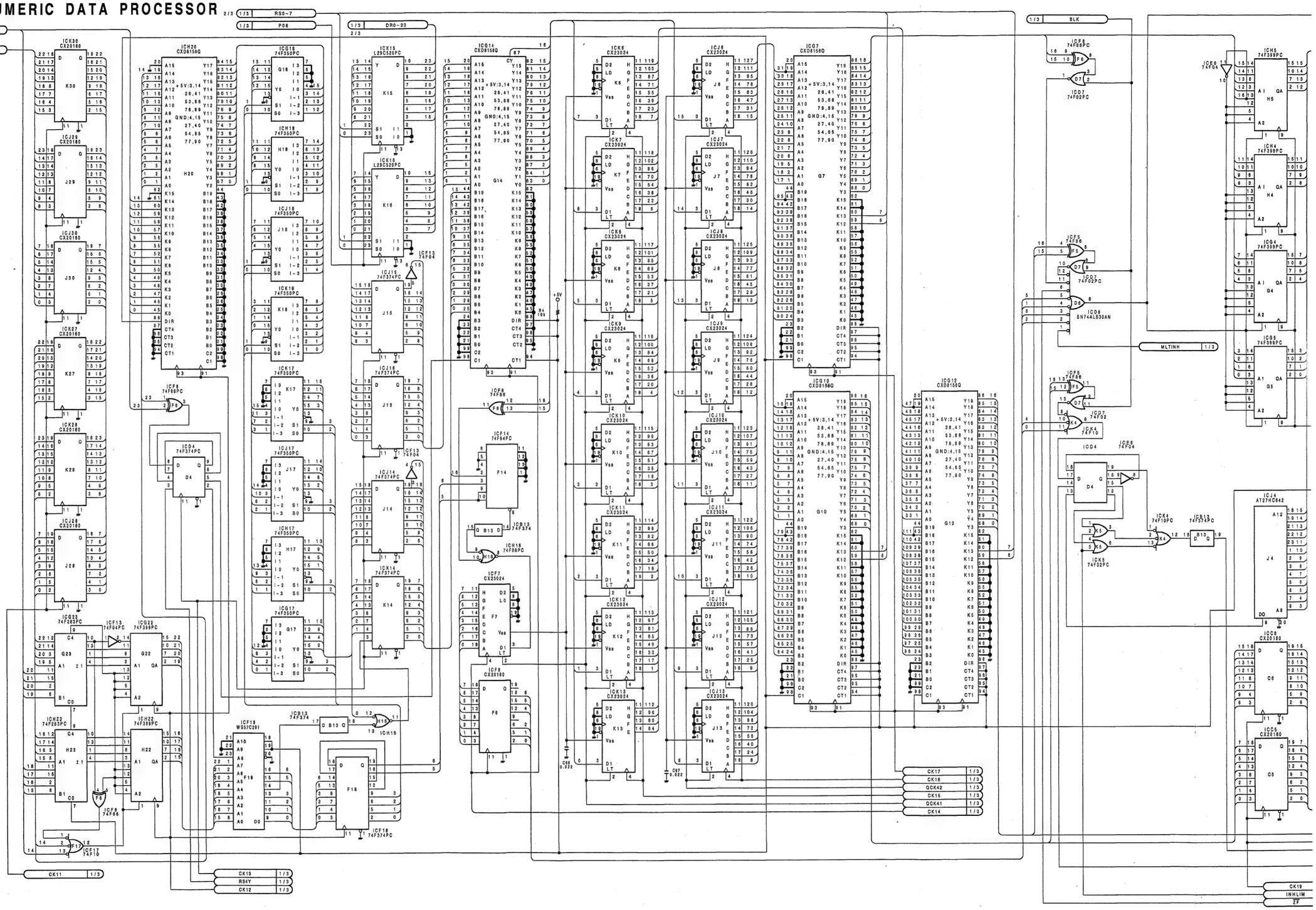

8-16

8-17

A | B | C | D | E | F | G | H

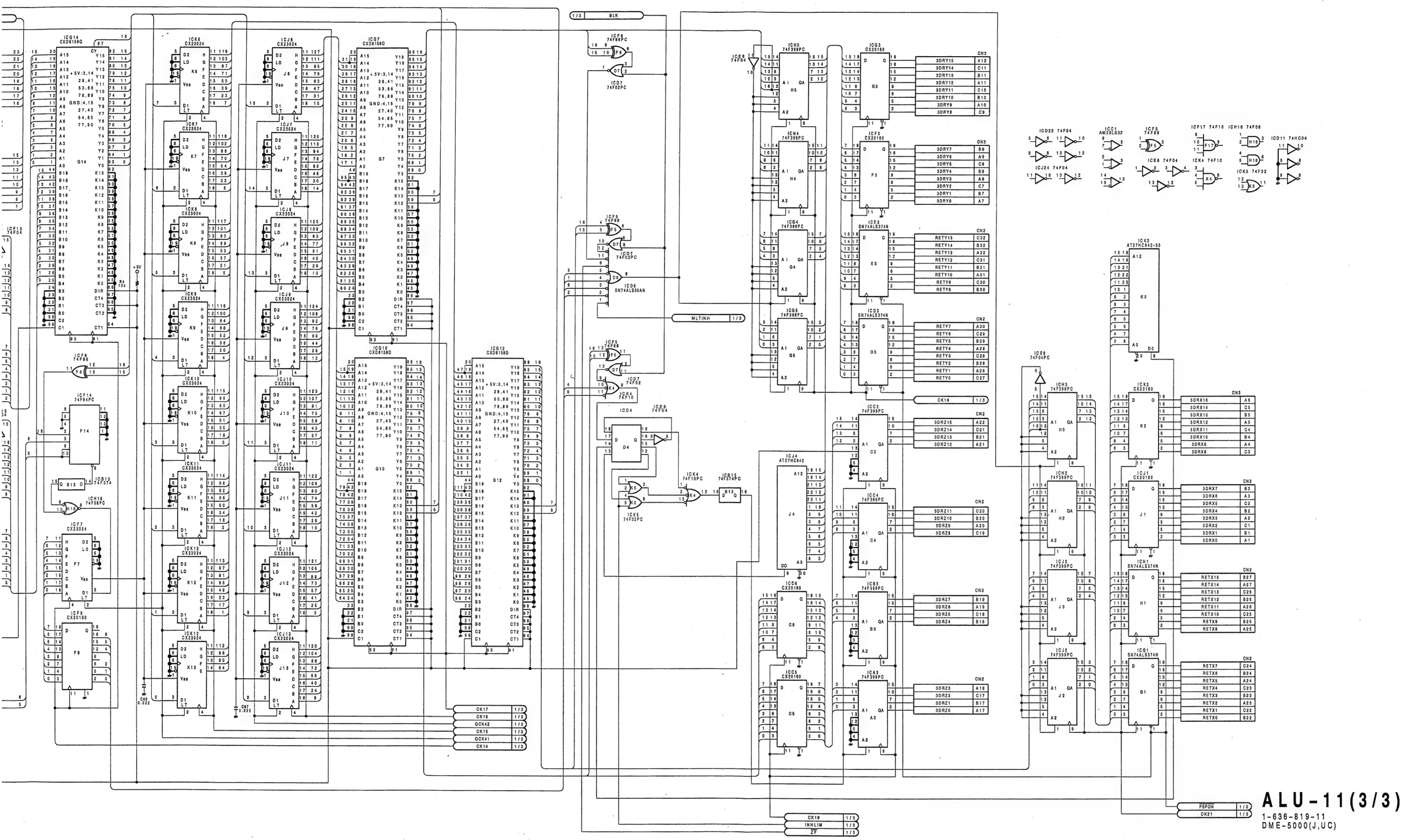

ALU-11(3/3)

1-636-819-11
DME-5000(J,UC)

CPU-82;SYSTEM CONTROL AND COMMUNICATION

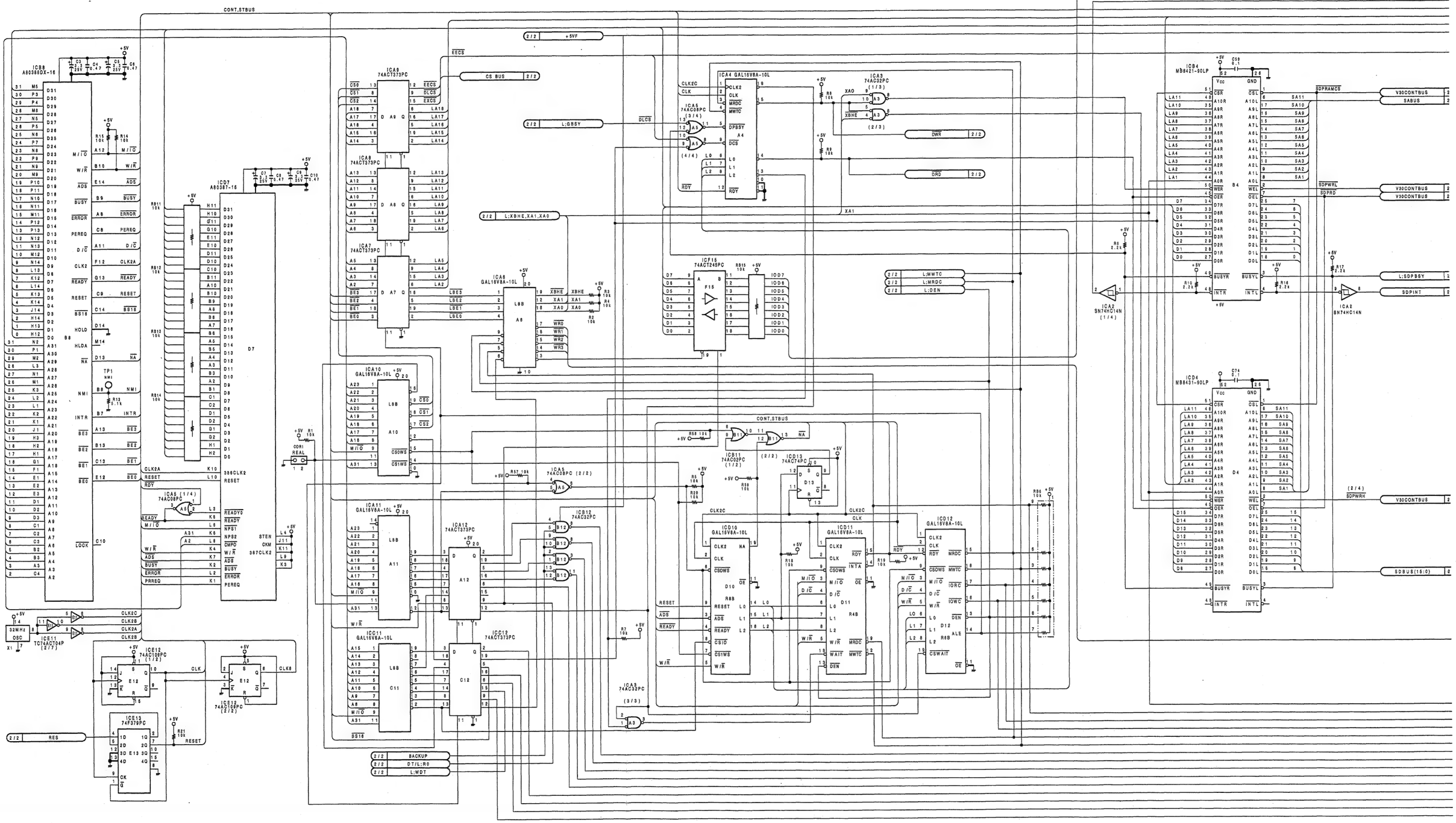

A B C D E F G H

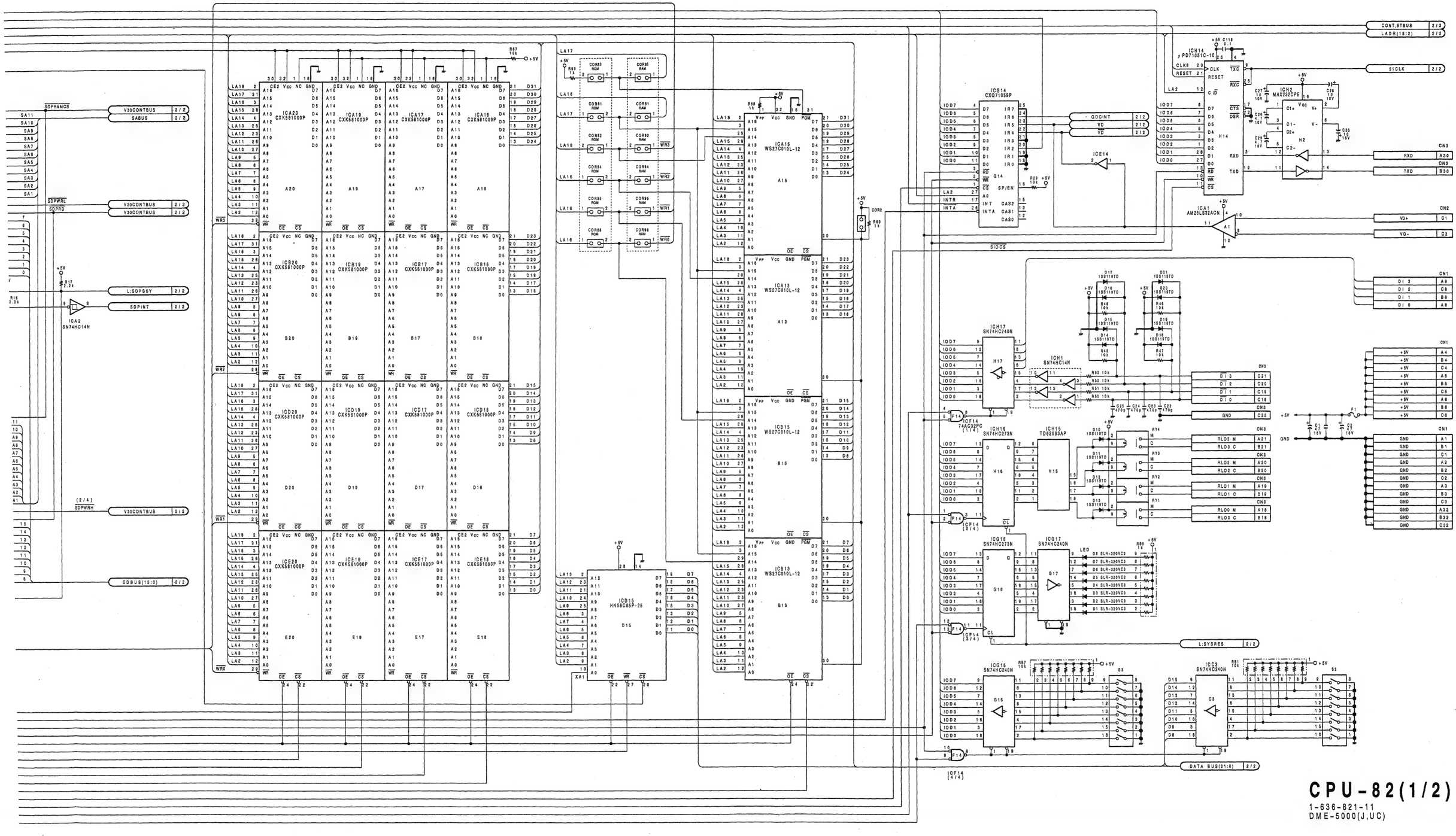

CPU-82(1/2)

1-636-821-11
DME-5000(J,UC)

CPU-82(2/2) CPU-82

CPU-82;SYSTEM CONTROL AND COMMUNICATION

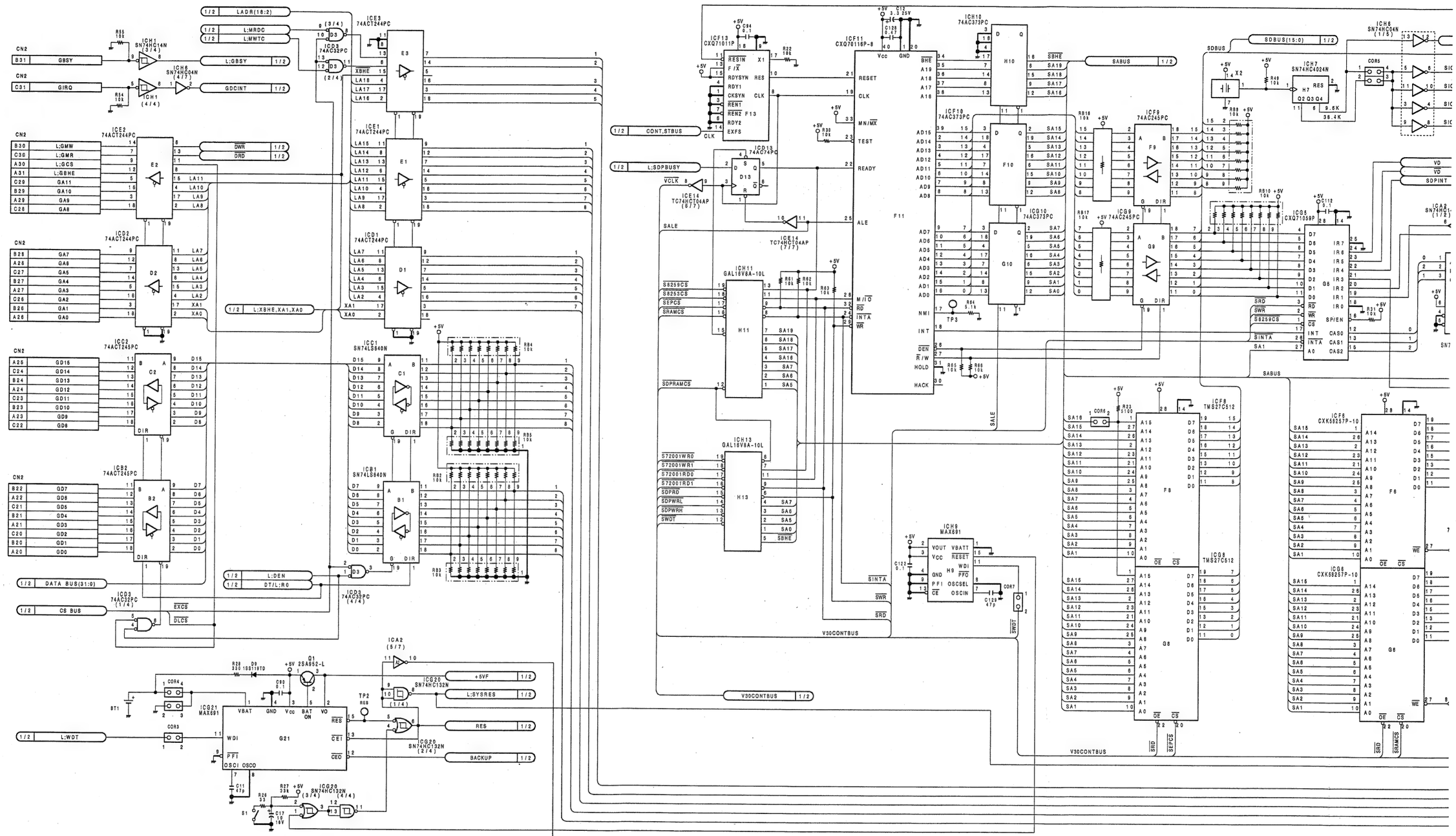

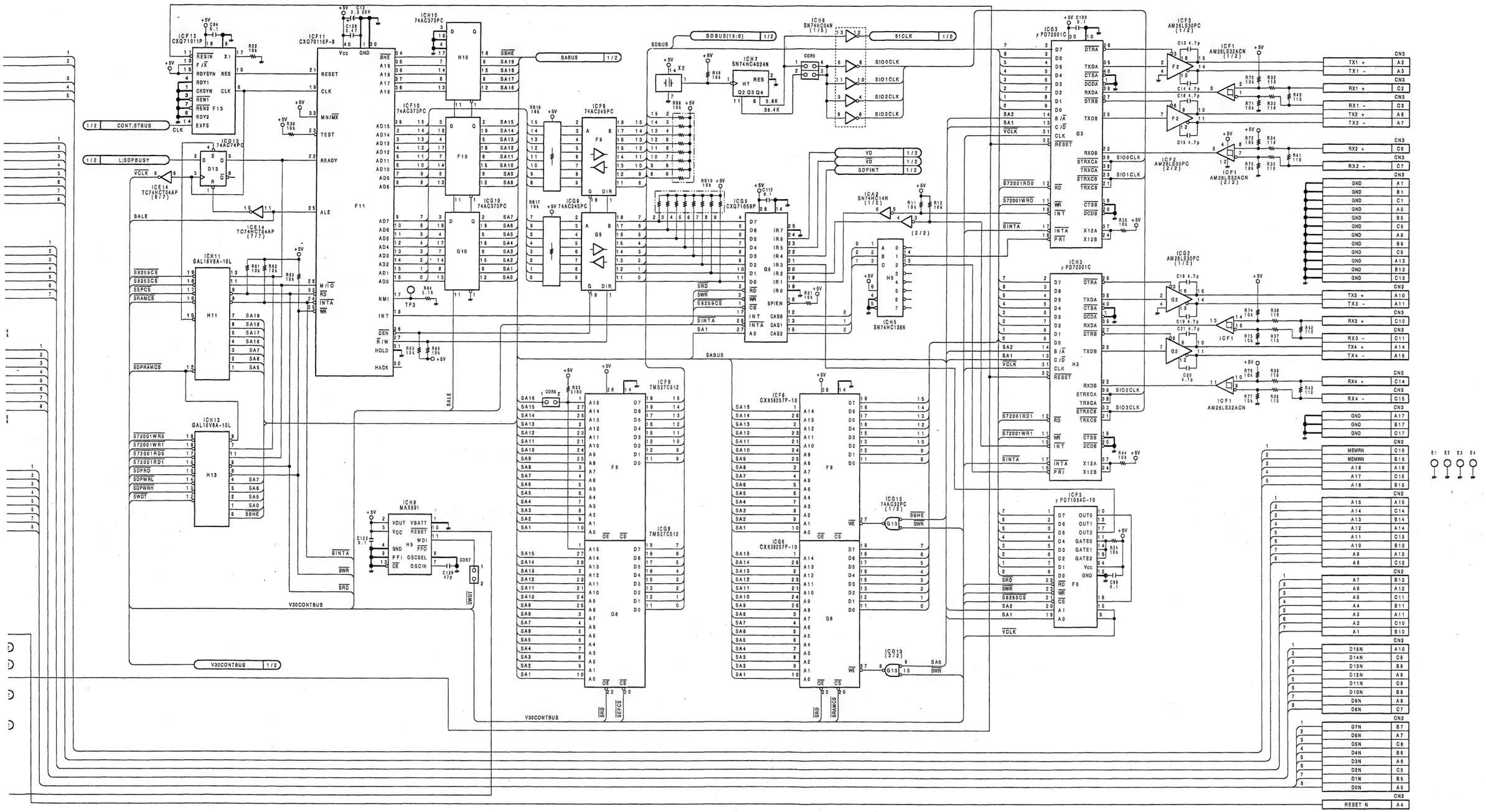

CPU-82(2/2)

1-636-821-11
DME-5000(J,UC)

DLP-9;HORIZONTAL AND VERTICAL LOW PASS FILTER

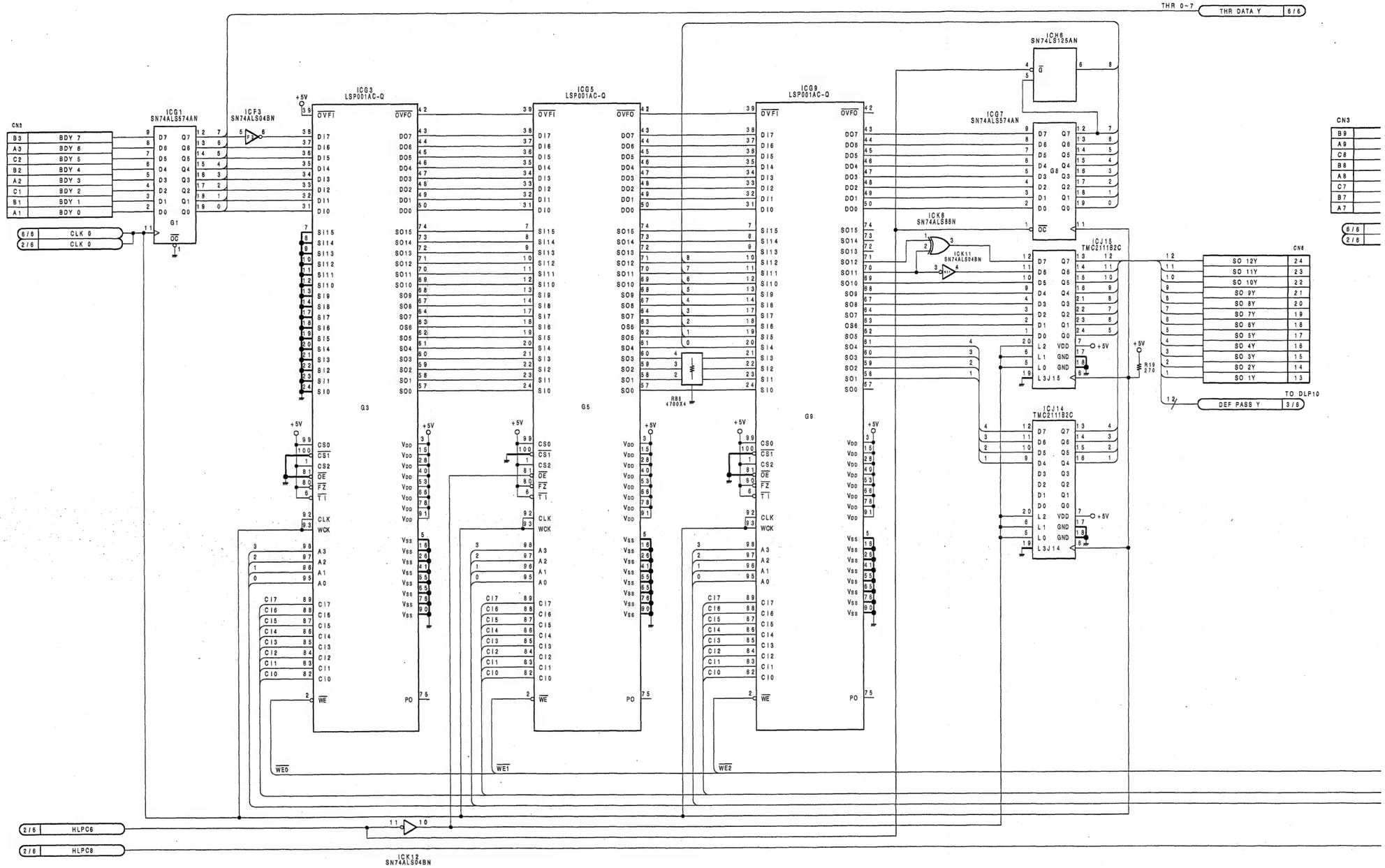

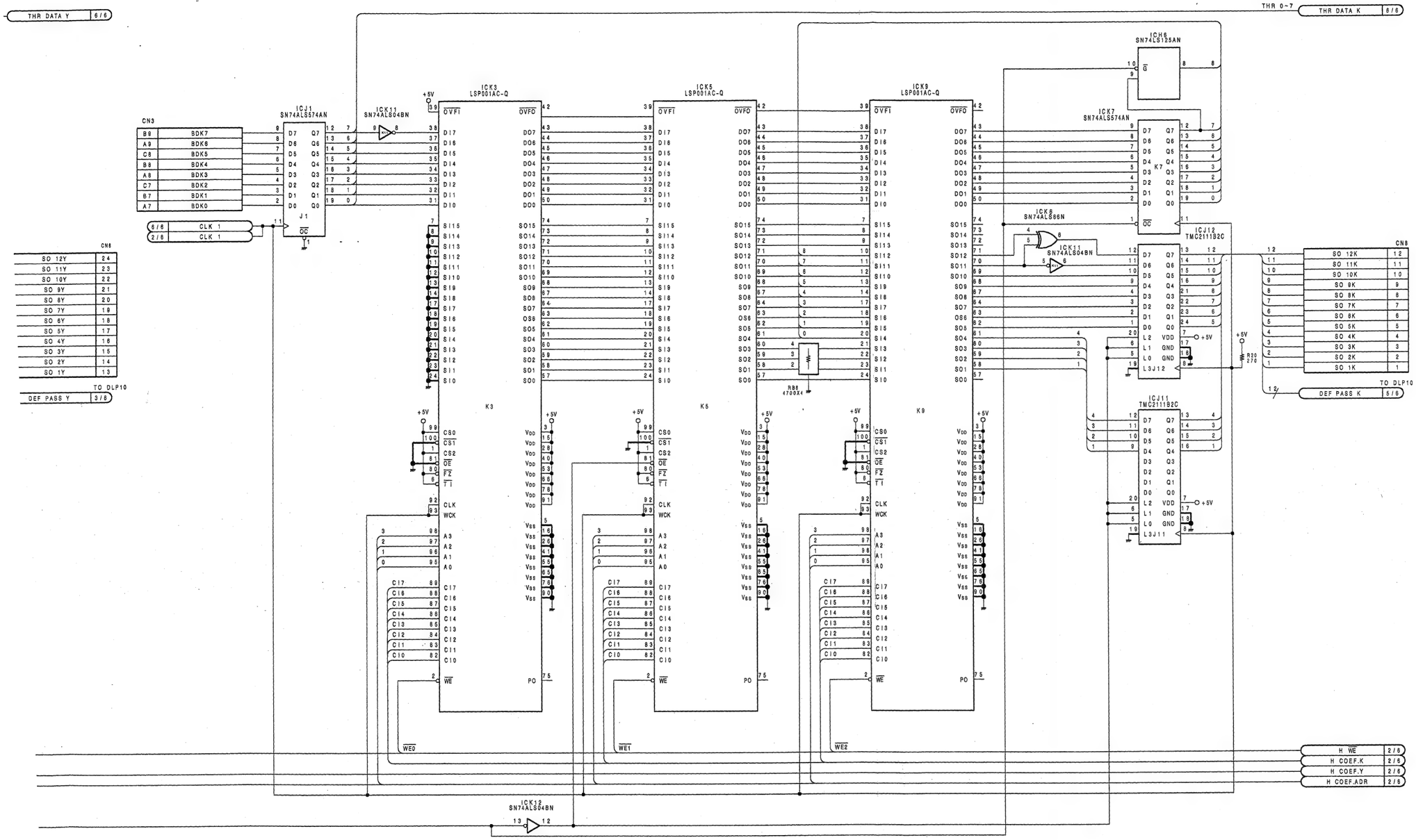

DLP-9(1/6)
1-636-817-11
DME-5000(J,UC)

DLP-9;HORIZONTAL AND VERTICAL LOW PASS FILTER

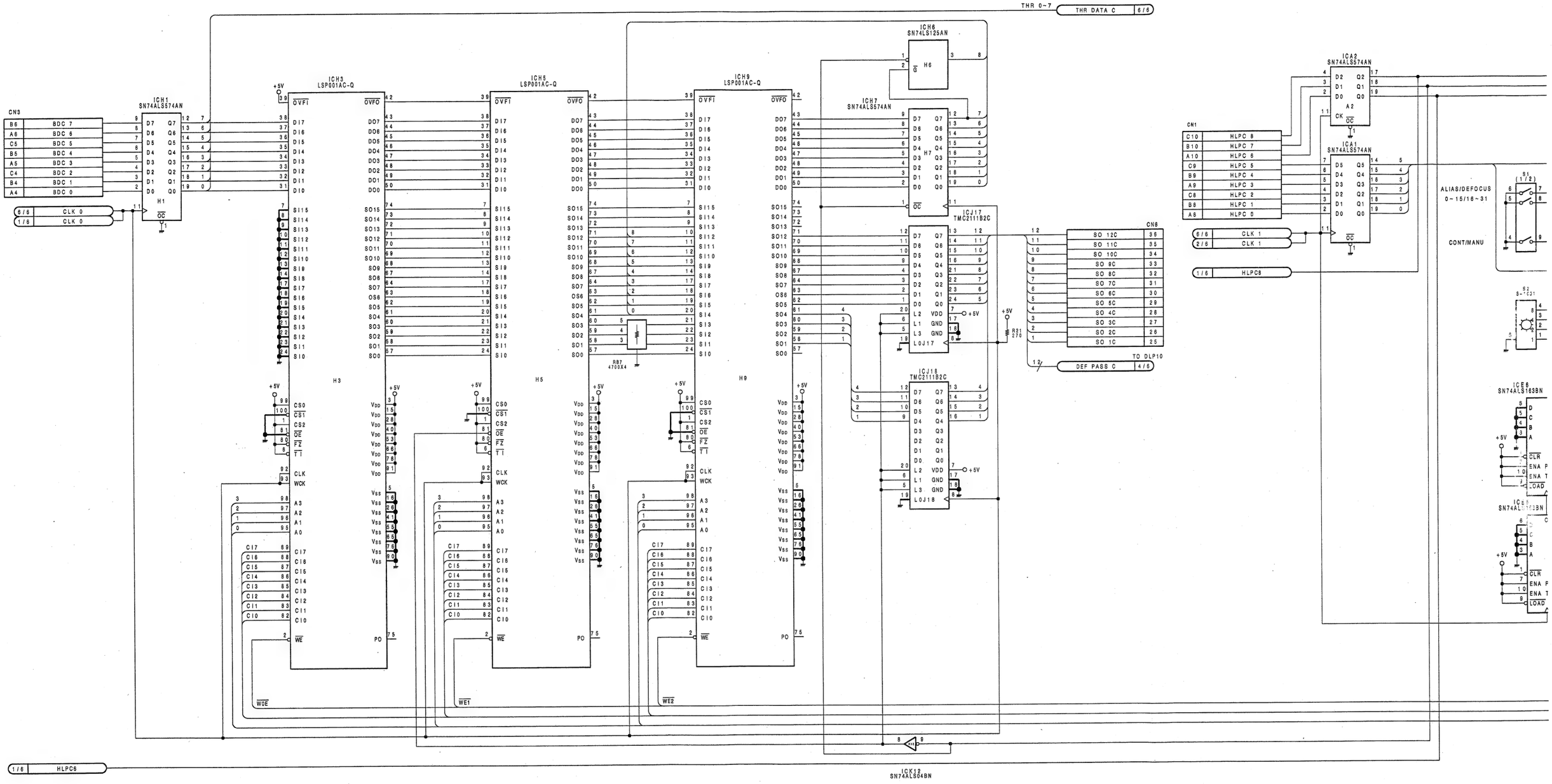

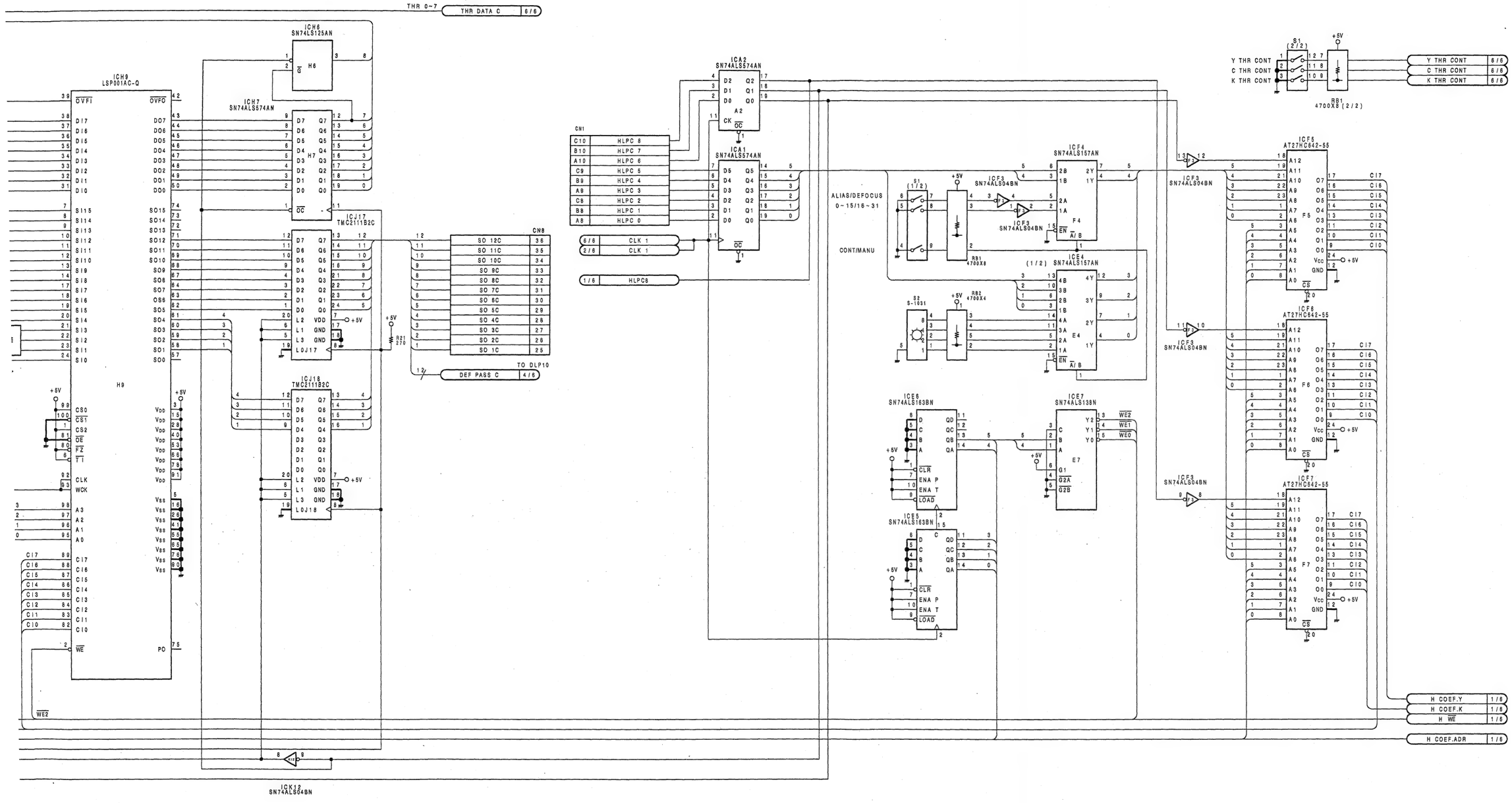
THR 0~7
THR DATA C 6/6
ICH6 SN74LS125AN
ICH9 LSP001AC-Q
ICH7 SN74LS574AN
ICJ17 TMC2111B2C
ICJ18 TMC2111B2C
ICK12 SN74LS04BN
CN8
SO 12C
SO 11C
SO 10C
SO 9C
SO 8C
SO 7C
SO 6C
SO 5C
SO 4C
SO 3C
SO 2C
SO 1C
TO DLP10
DEF PASS C 4/6
R21 270
+5V
ICA2 SN74ALS574AN
ICA1 SN74ALS574AN
CN1
HLPC 8
HLPC 7
HLPC 6
HLPC 5
HLPC 4
HLPC 3
HLPC 2
HLPC 1
HLPC 0
6/6 CLK 1
2/6 CLK 1
1/6 HLPC8
ALIAS/DEFOCUS 0~15/16~31
CONT/MANU
S1 (1/2)
S2 S-1031
RB1 4700X8
RB2 4700X4
ICE4 SN74ALS157AN
ICF3 SN74ALS04BN
ICE6 SN74ALS163BN
ICE5 SN74ALS163BN
ICE7 SN74ALS138N
S1 (2/2)
Y THR CONT
C THR CONT
K THR CONT
RB1 4700X8 (2/2)
ICF5 AT27HC642-55
ICF6 AT27HC642-55
ICF7 AT27HC642-55
H COEF.Y 1/6
H COEF.K 1/6
H WE 1/6
H COEF.ADR 1/6
WE2

DLP-9;HORIZONTAL AND VERTICAL LOW PASS FILTER

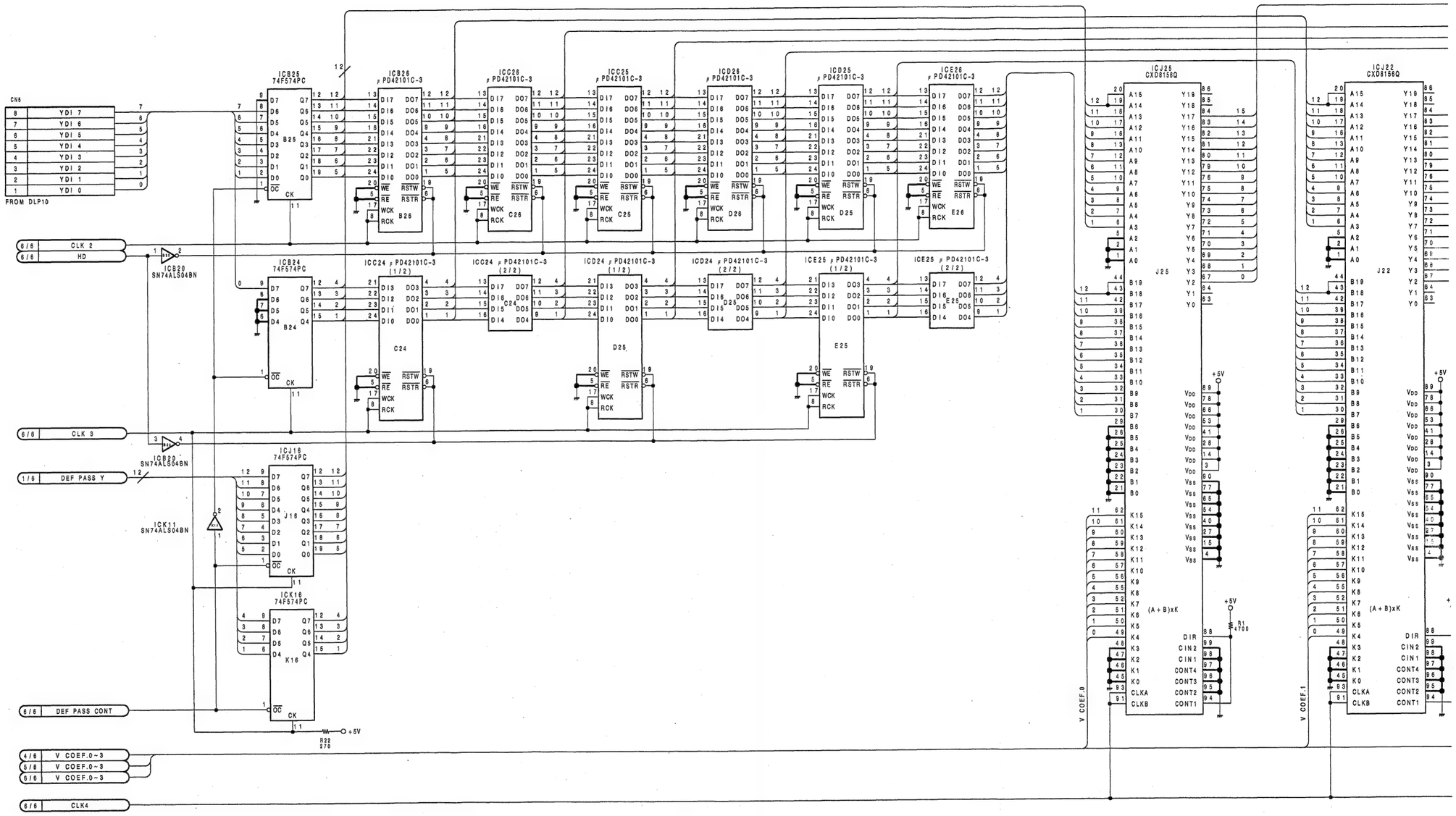

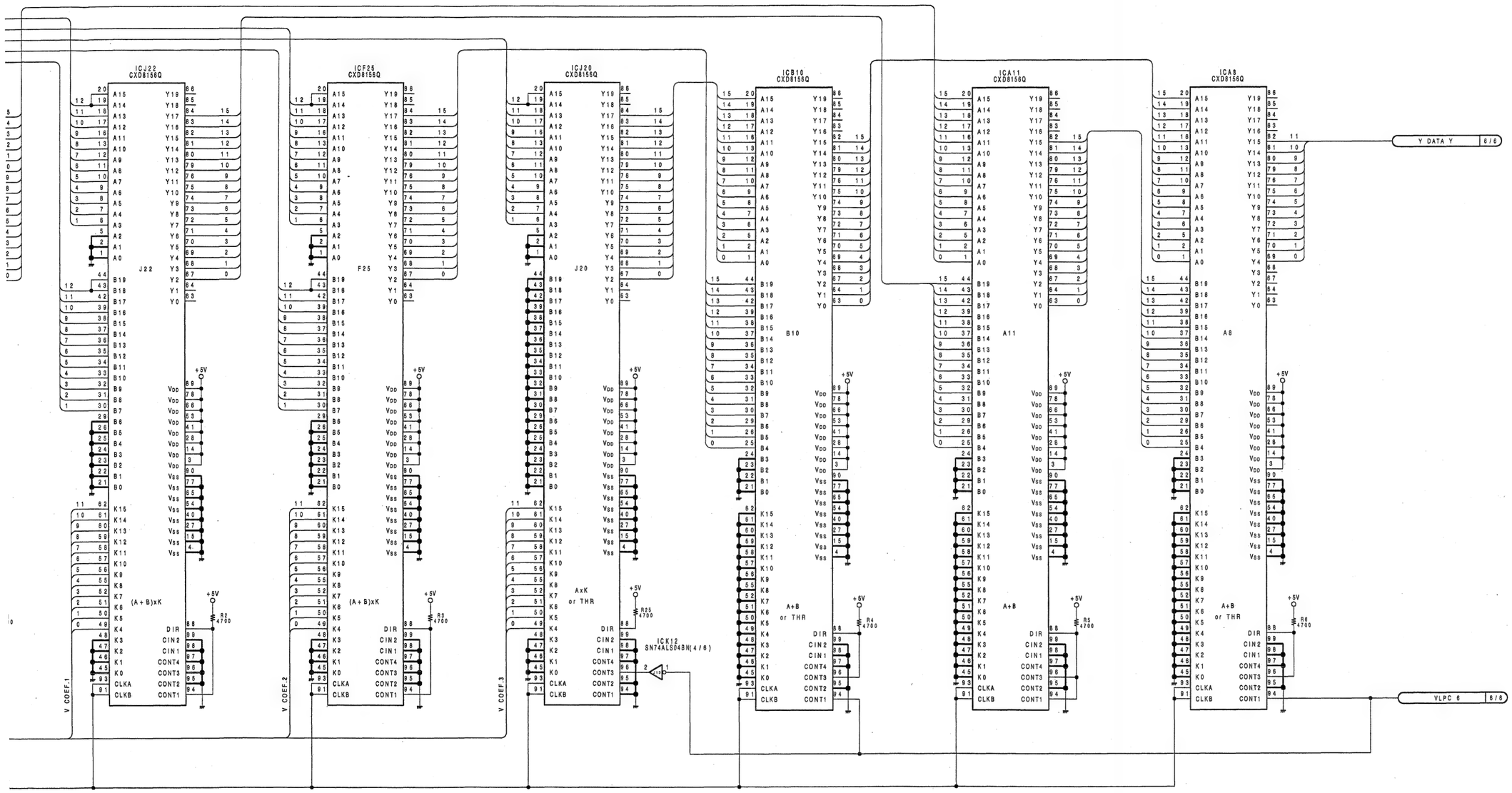

DLP-9(3/6)
1-636-817-11
DME-5000(J,UC)

DLP-9;HORIZONTAL AND VERTICAL LOW PASS FILTER

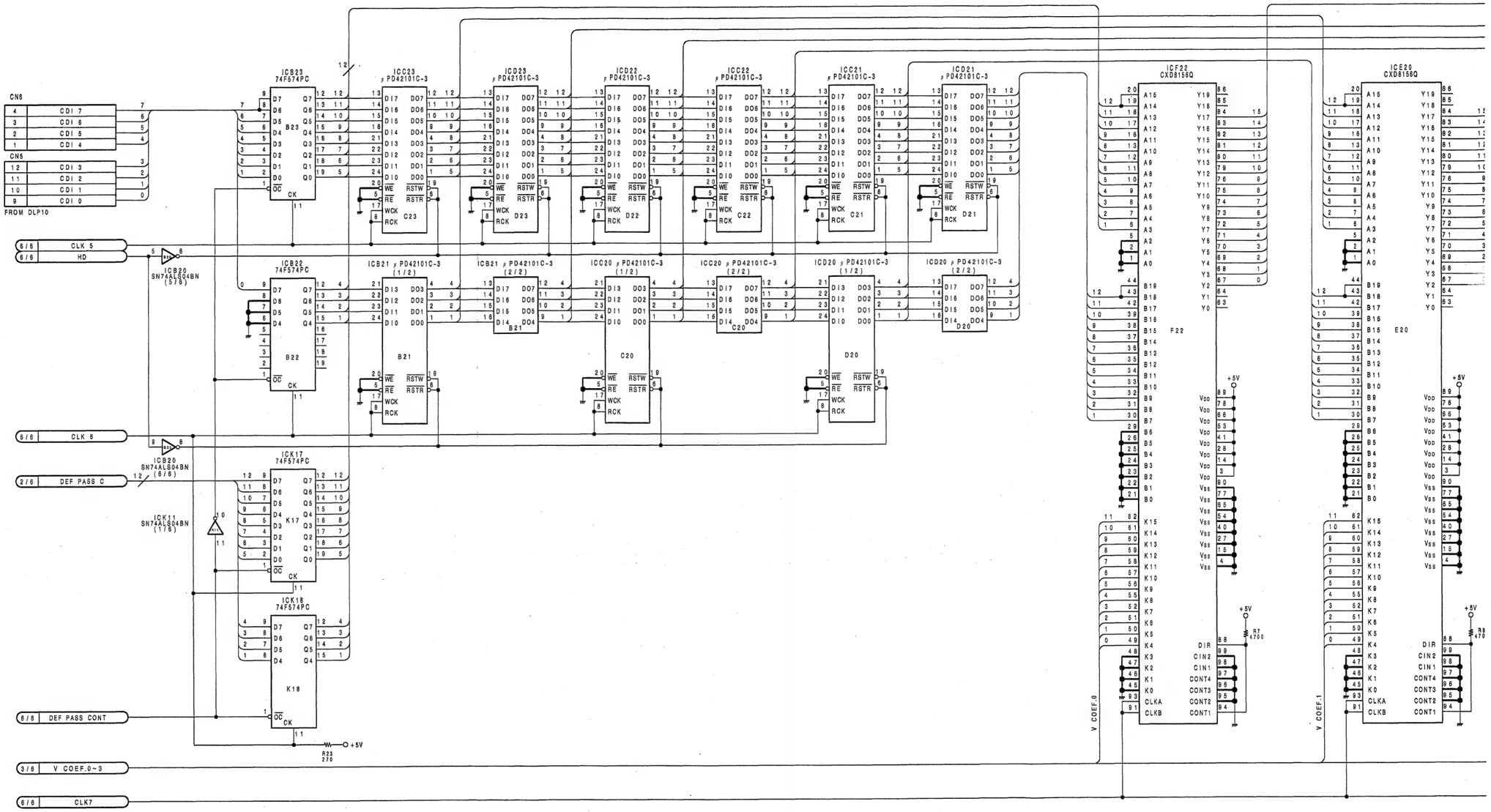

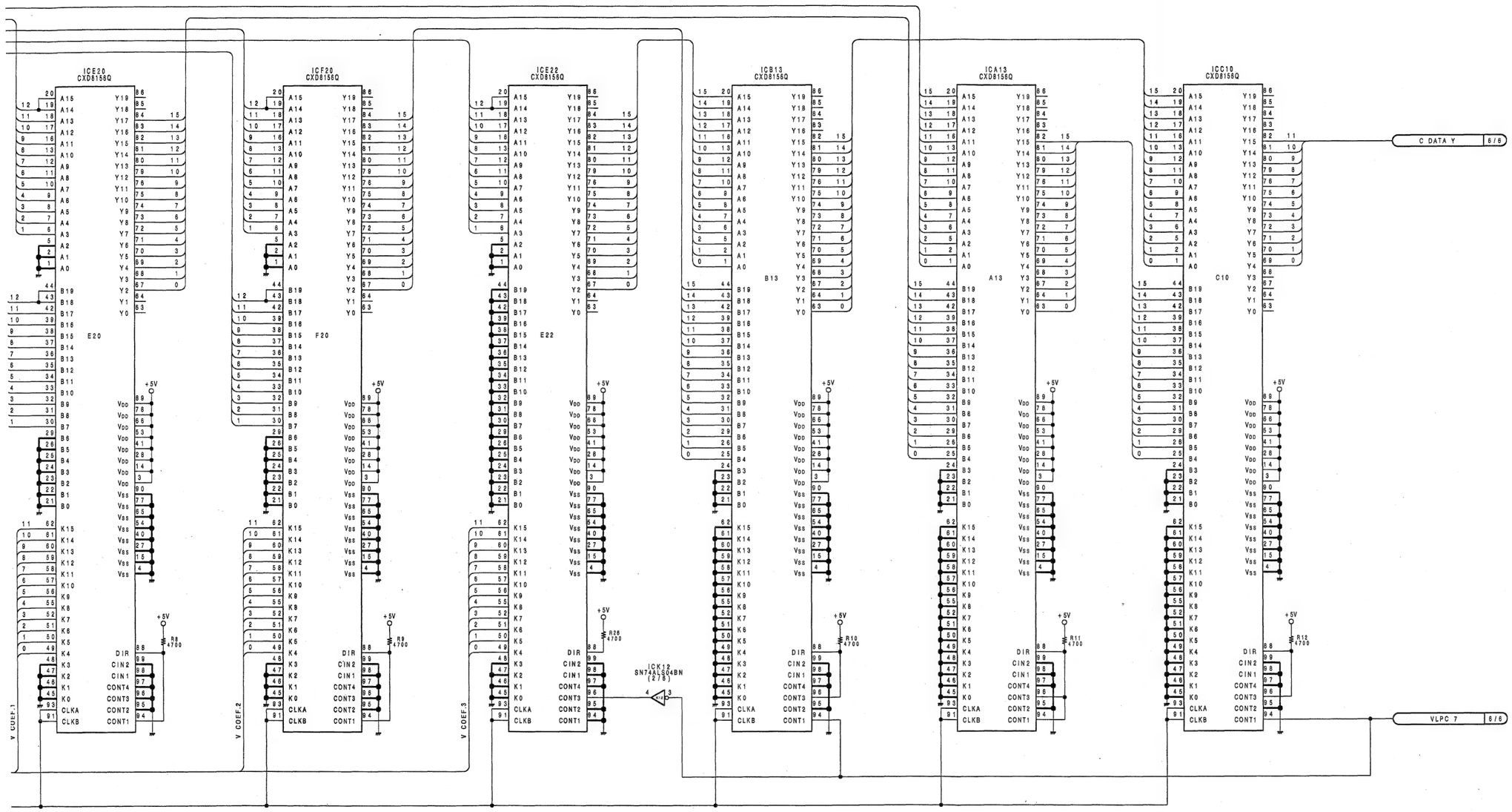

DLP-9(4/6)
1-636-817-11
DME-5000(J,UC)

DLP-9;HORIZONTAL AND VERTICAL LOW PASS FILTER

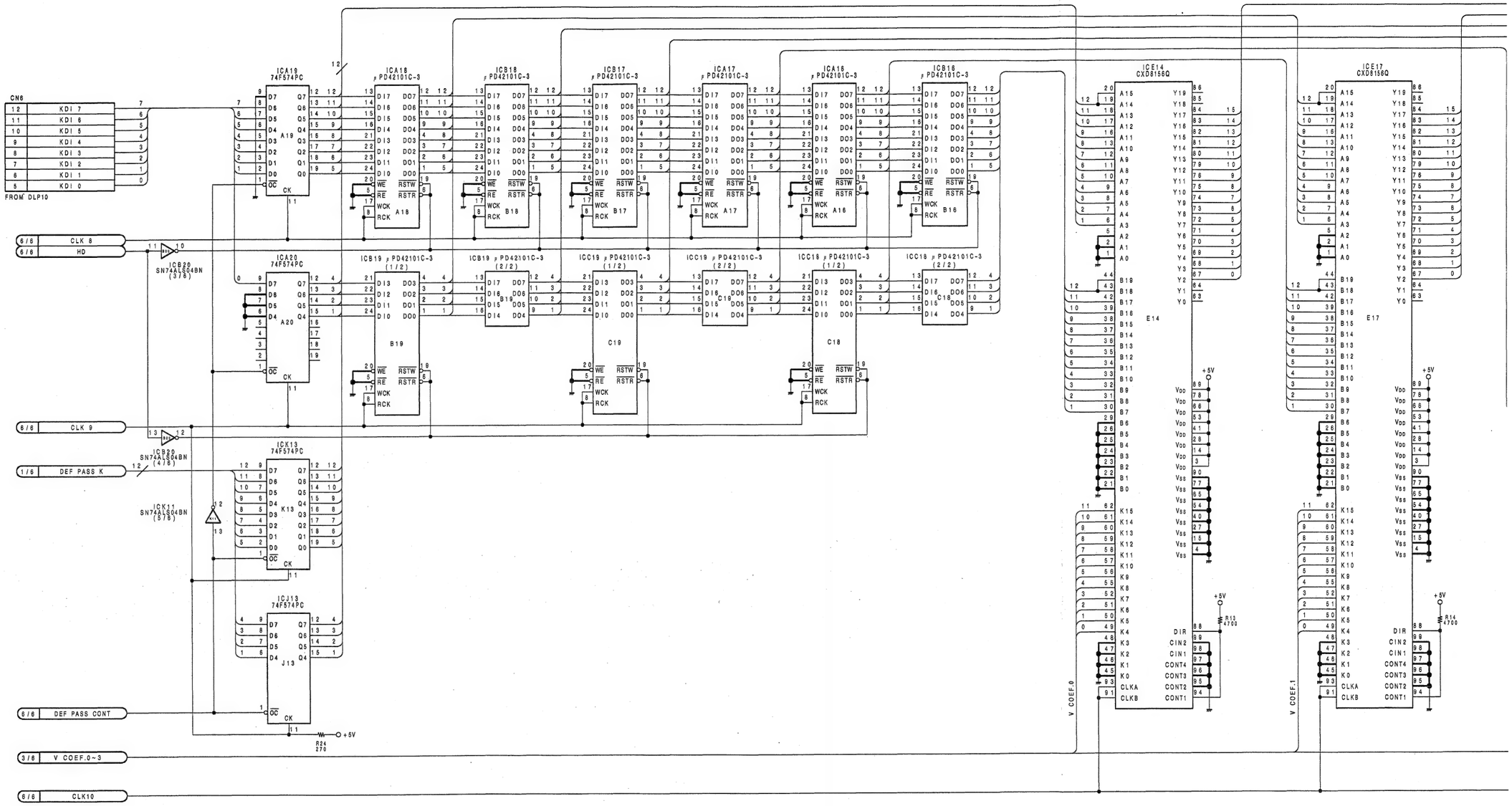

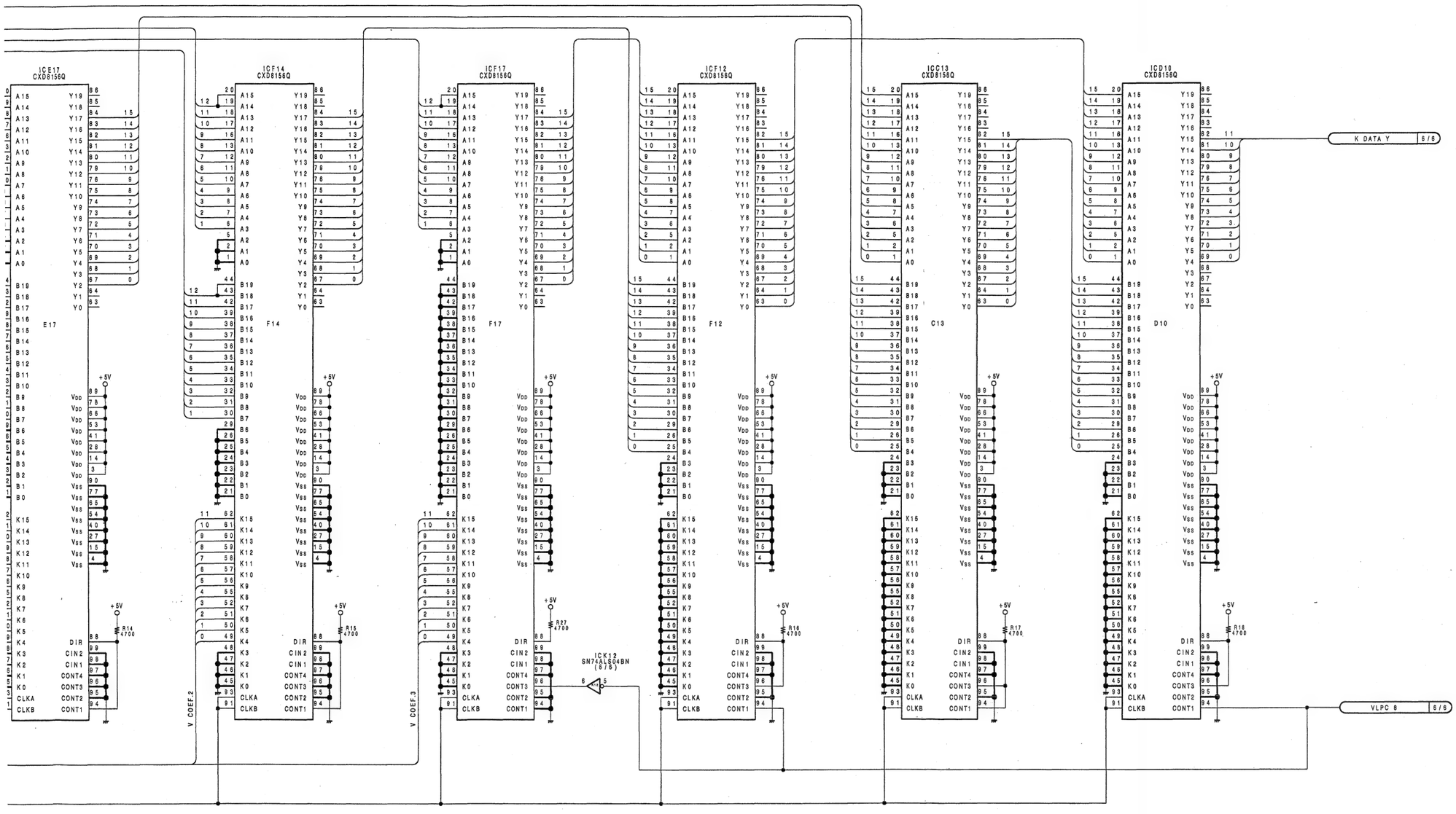

DLP-9(5/6)
1-636-817-11
DME-5000(J,UC)

DLP-9;HORIZONTAL AND VERTICAL LOW PASS FILTER

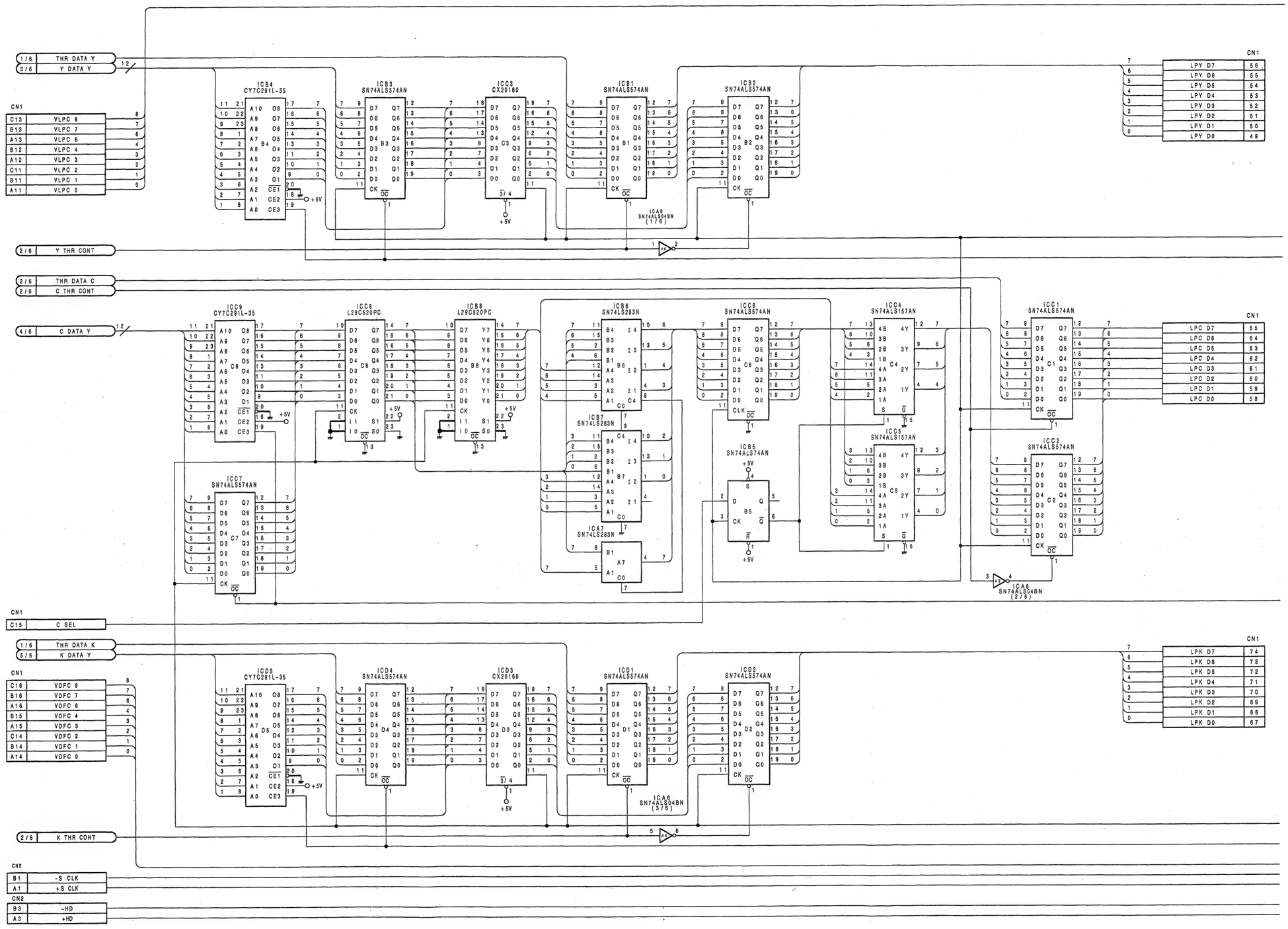

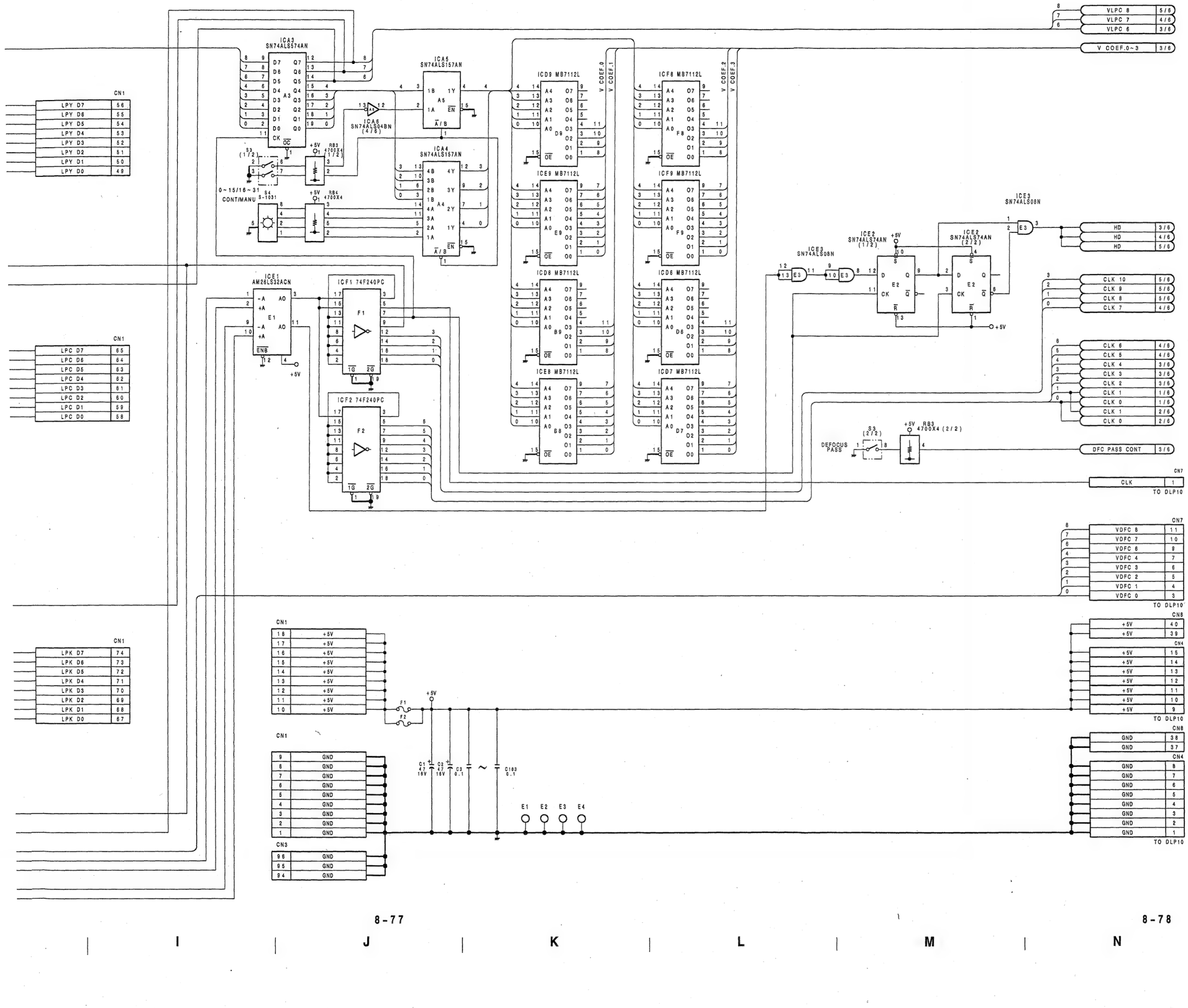

DLP-9(6/6)
1-636-817-11
DME-5000(J,UC)

DLP-10;IIR VERTICAL LOW PASS FILTER

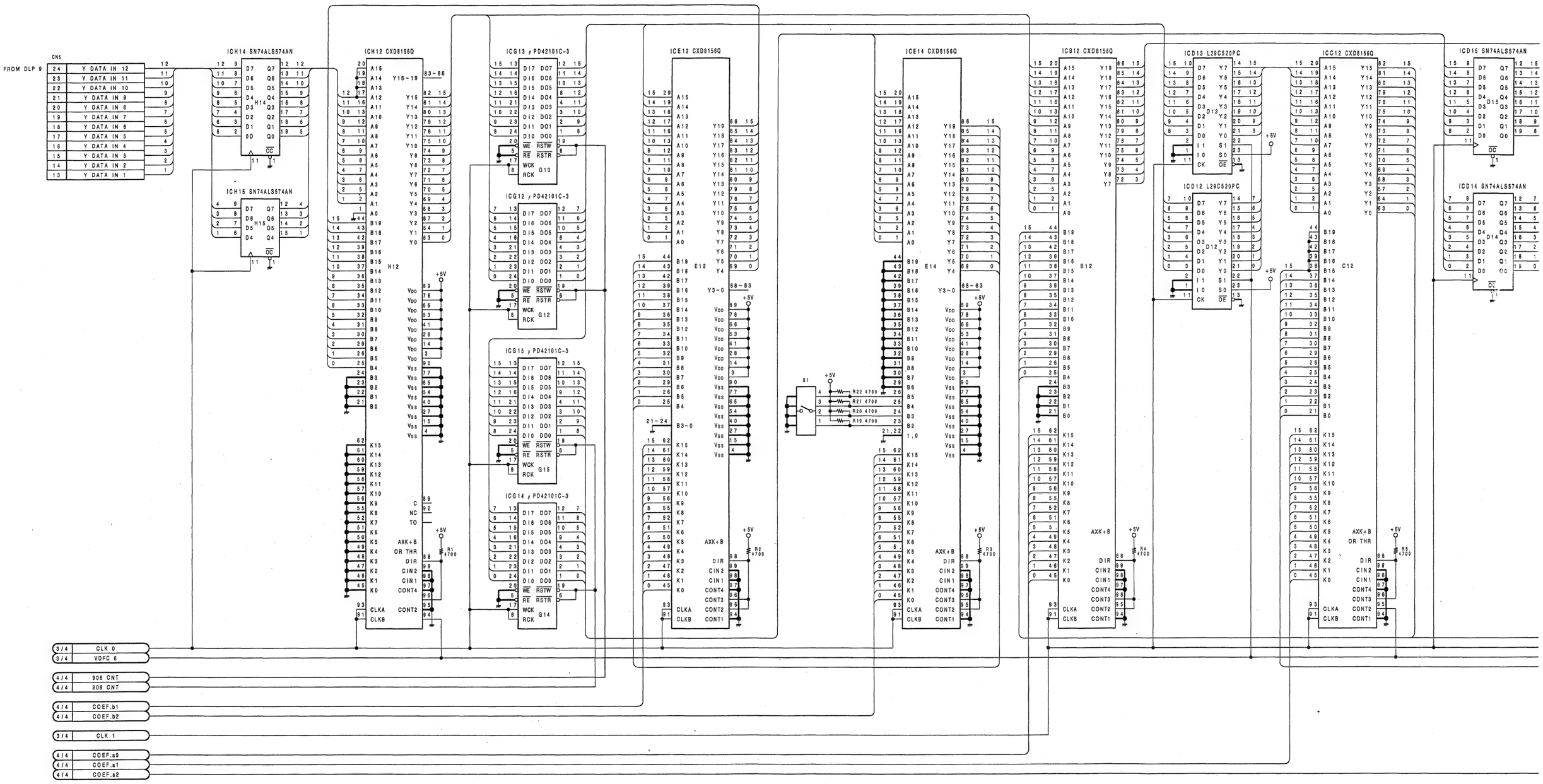

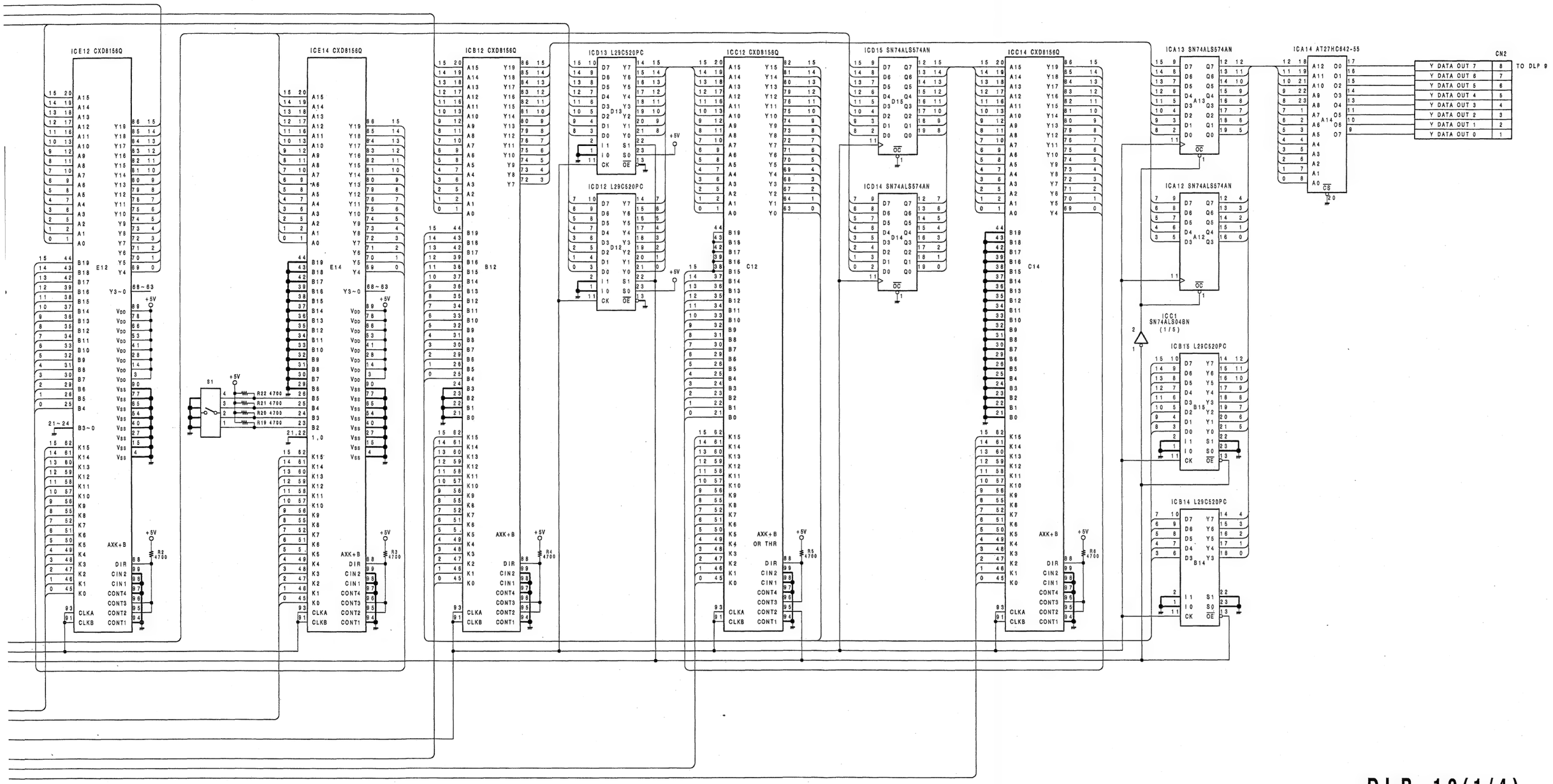

DLP-10(1/4)
1-636-818-11
DME-5000(J,UC)

DLP-10;IIR VERTICAL LOW PASS FILTER

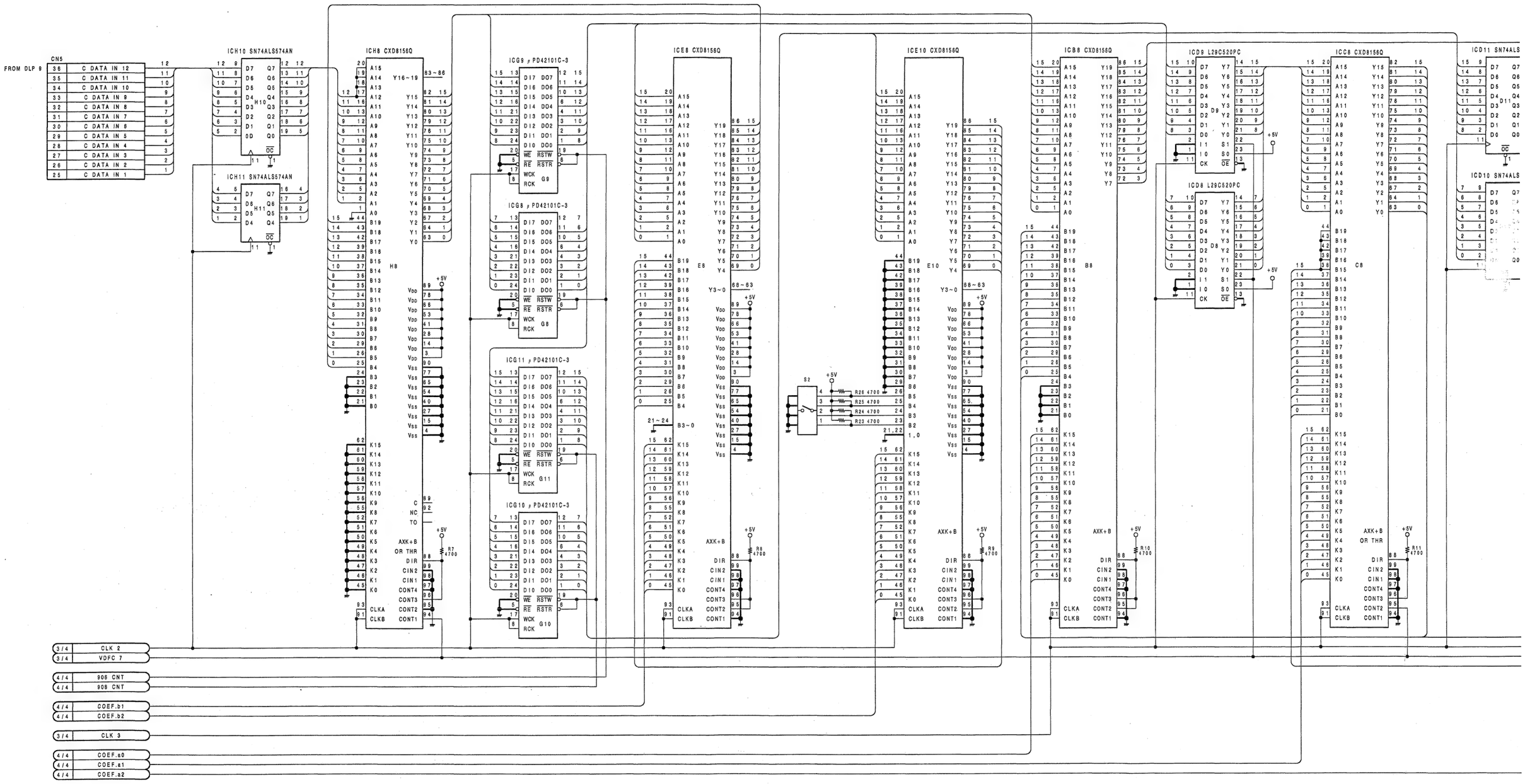

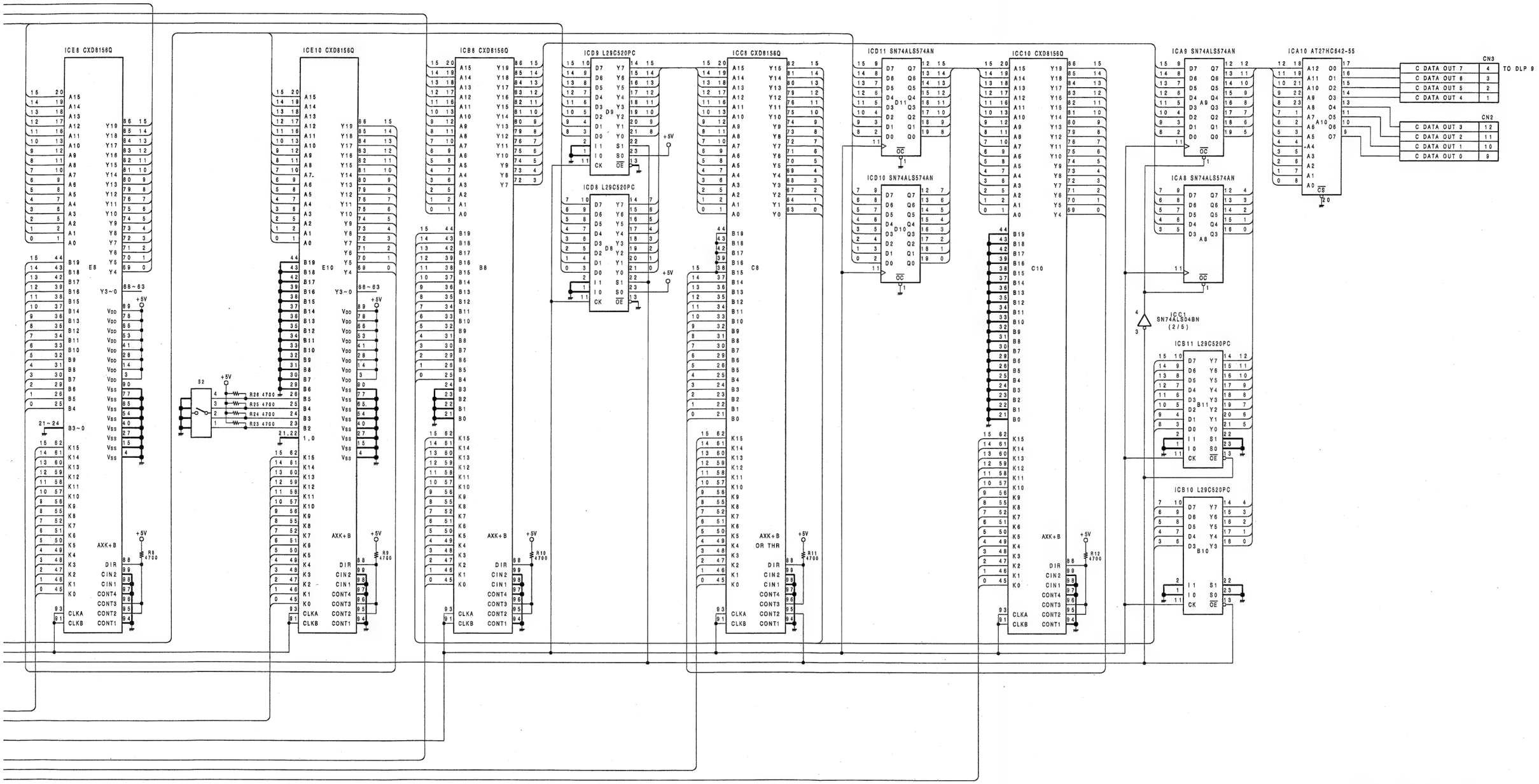

DLP-10(2/4)

1-636-818-11
DME-5000(J,UC)

DLP-10;IIR VERTICAL LOW PASS FILTER

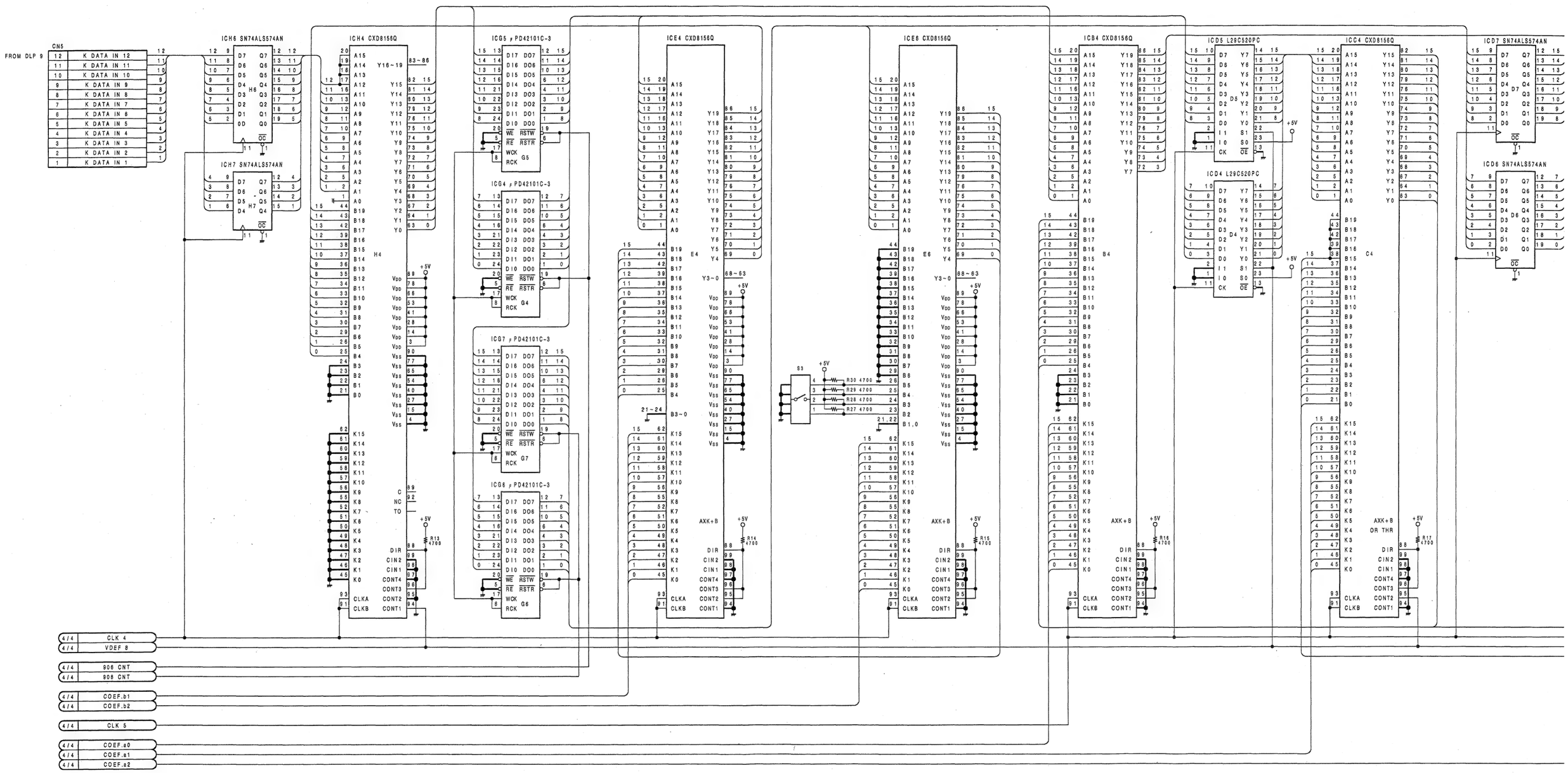

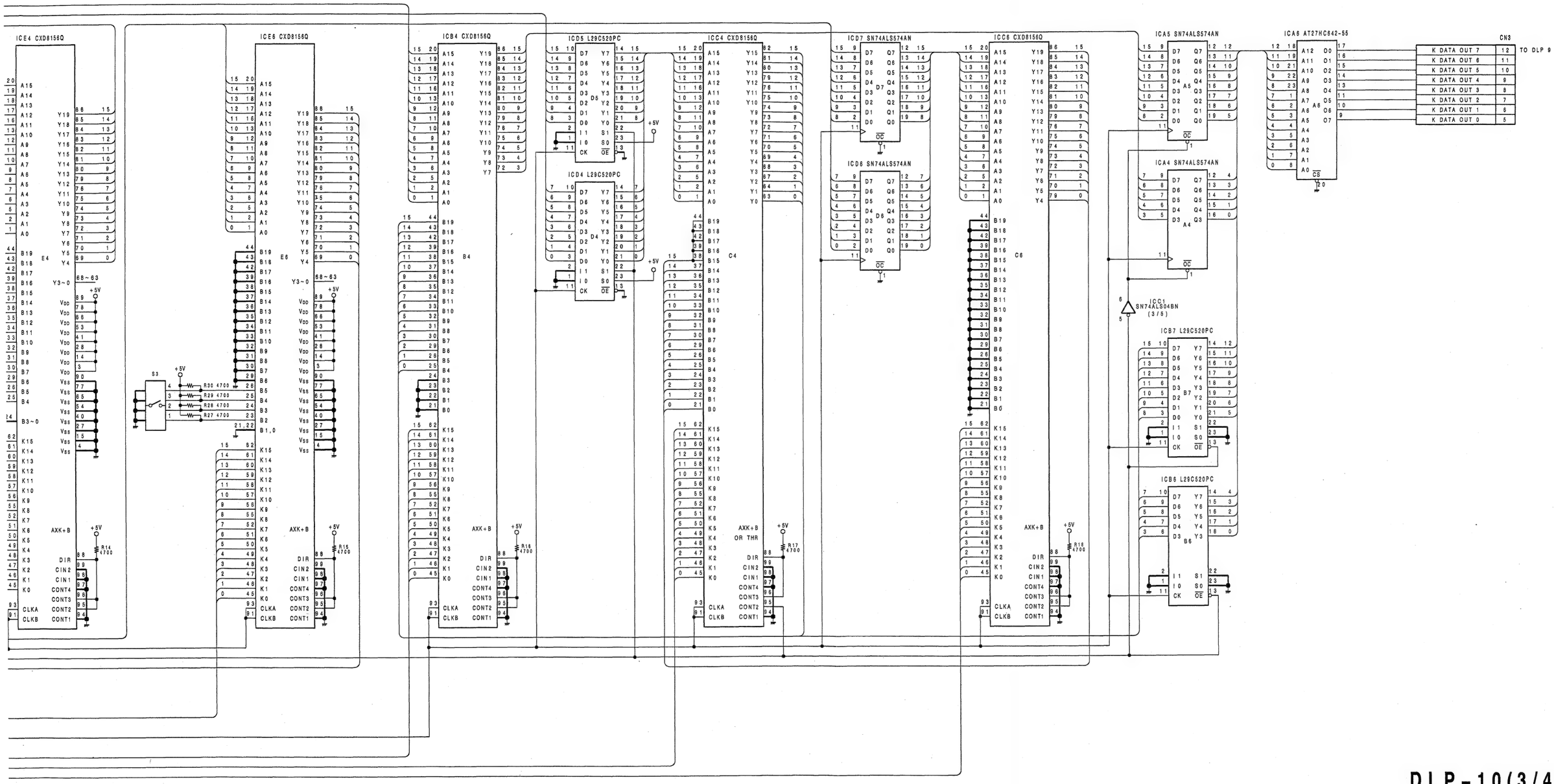

DLP-10(3/4)
1-636-818-11
DME-5000(J,UC)

DLP-10;IIR VERTICAL LOW PASS FILTER

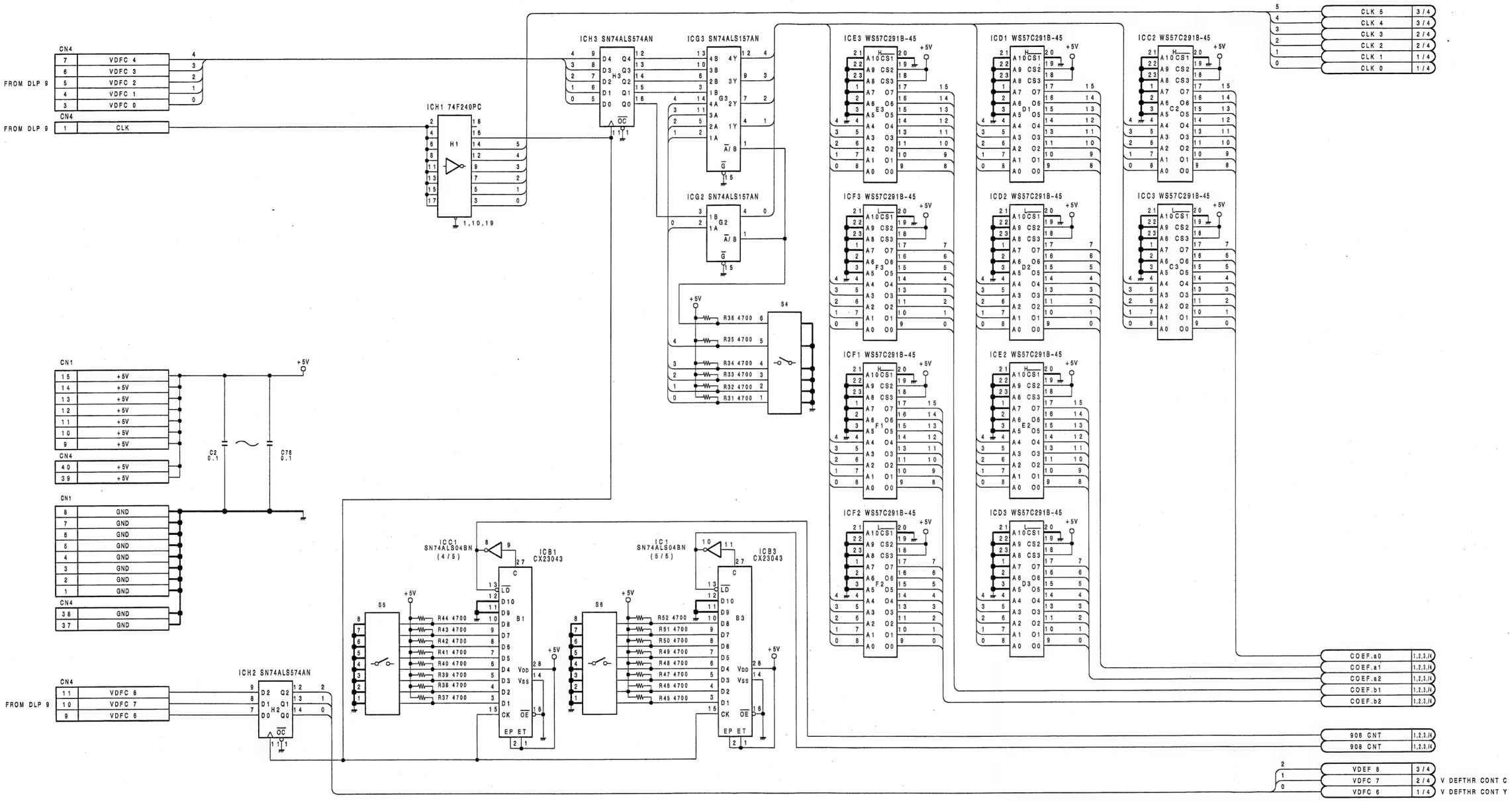

DLP-10(4/4)
1-636-818-11
DME-5000(J,UC)

DPR-15;INPUT PIXEL EFFECT GENERATOR AND MONITOR DETECT

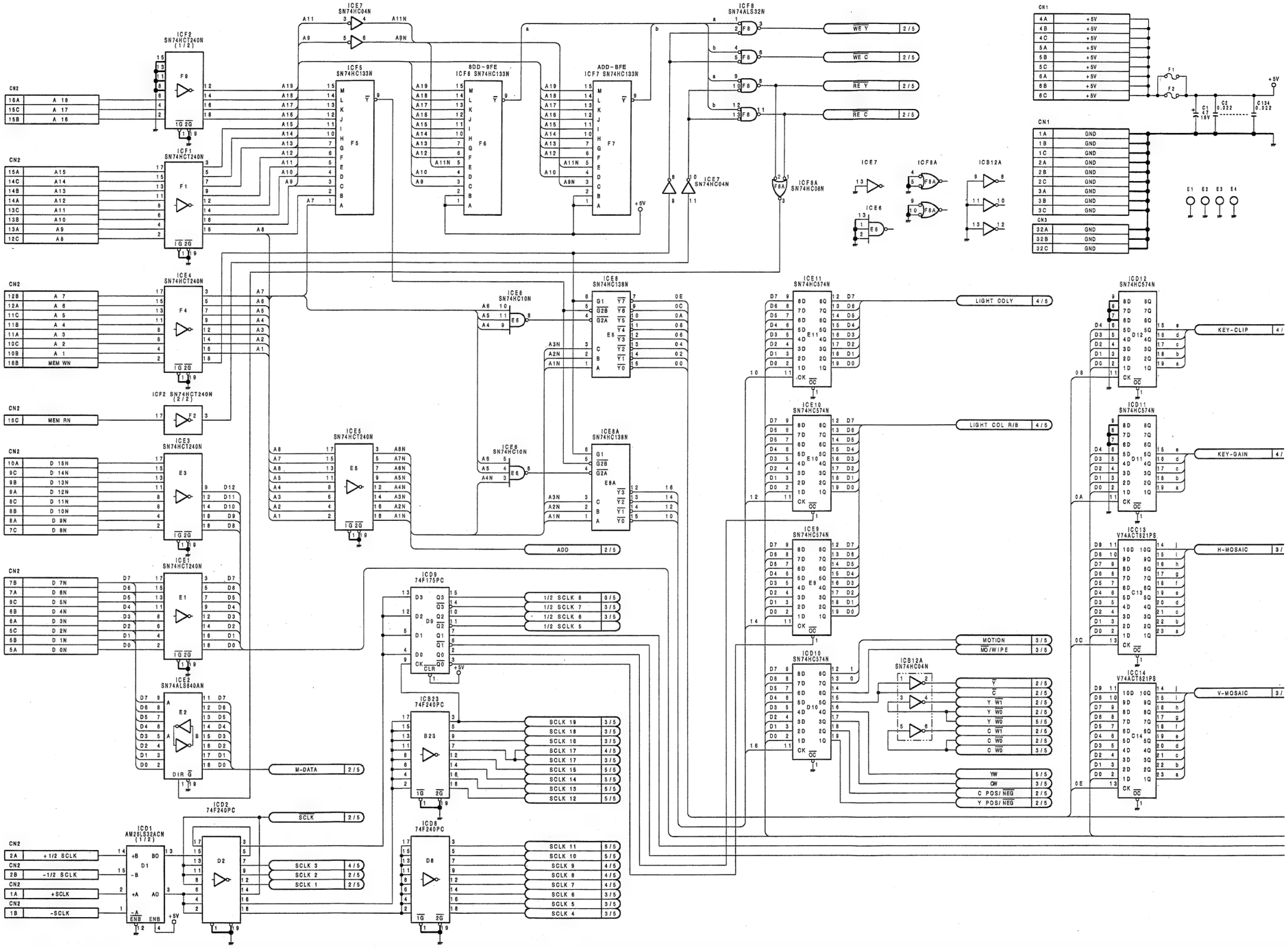

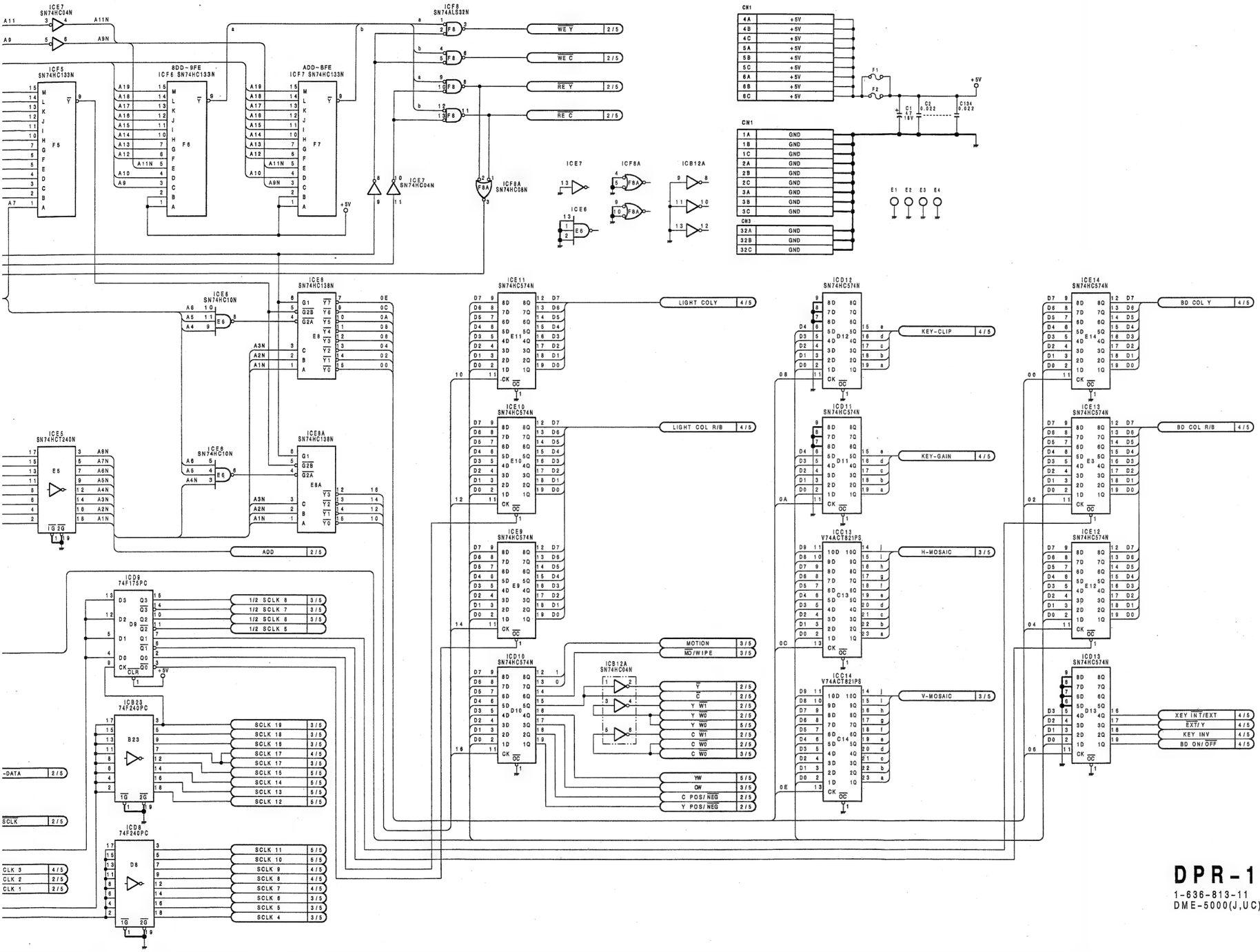

DPR-15(1/5)

1-636-813-11

DME-5000(J,UC)

DPR-15(2/5) DPR-15

DPR-15;INPUT PIXEL EFFECT GENERATOR AND MONITOR DETECT

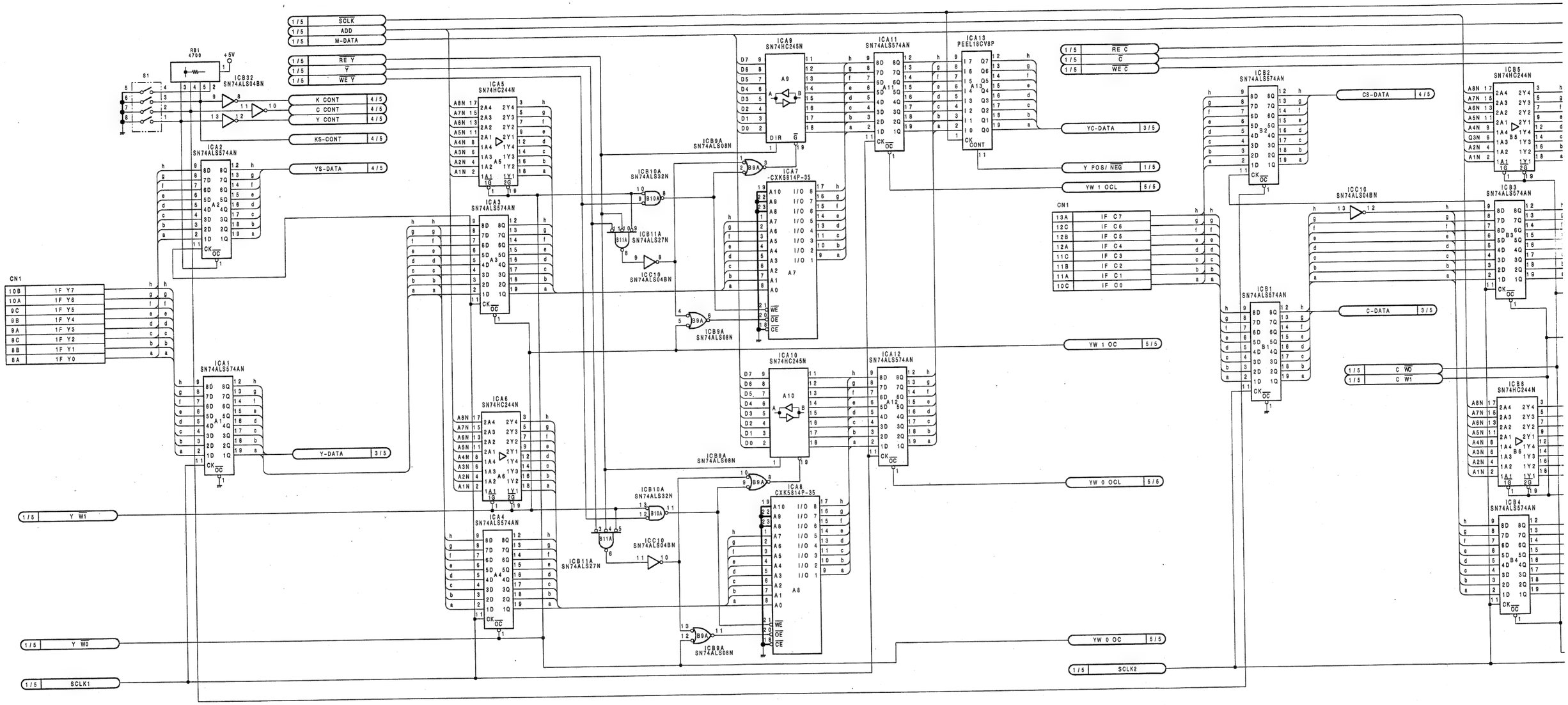

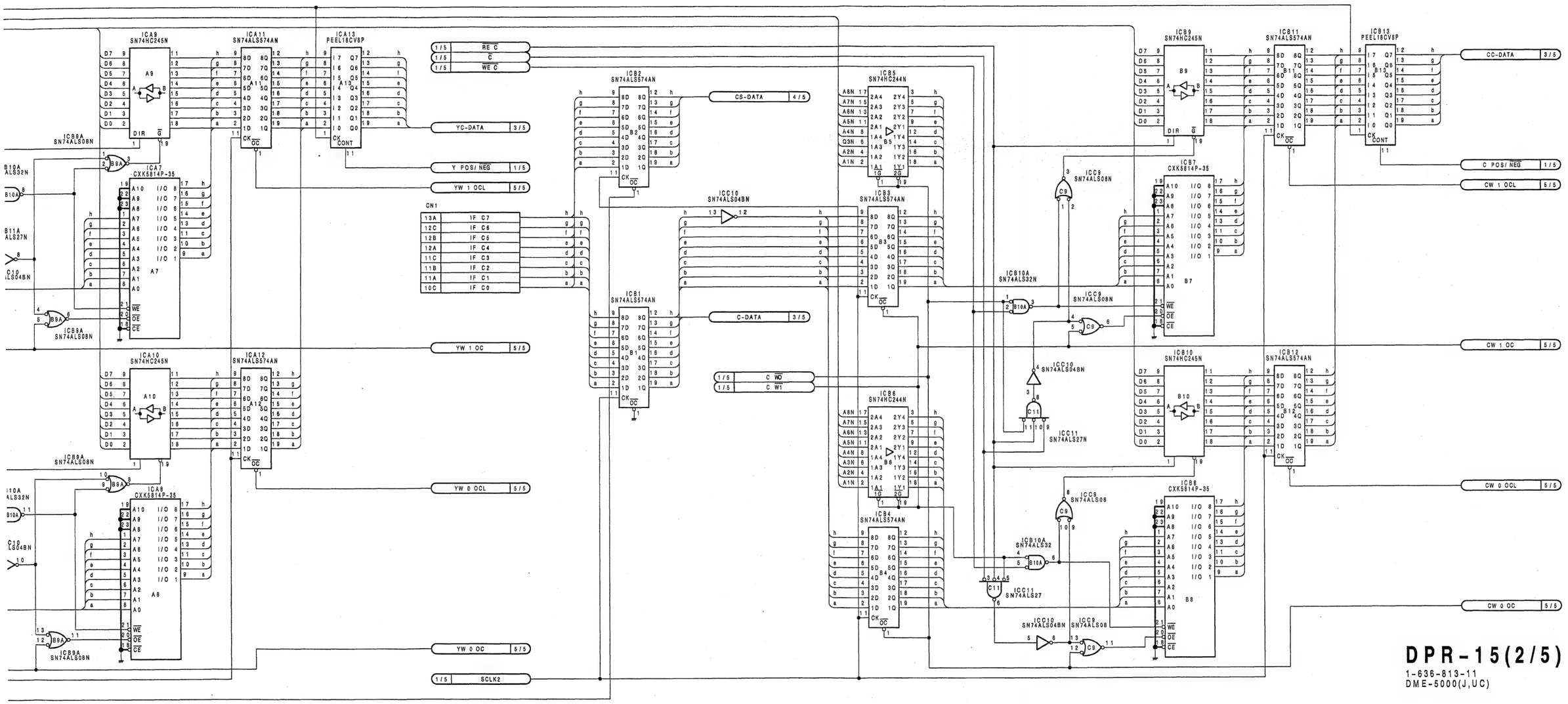

DPR-15(2/5)

1-636-813-11
DME-5000(J,UC)

DPR-15;INPUT PIXEL EFFECT GENERATOR AND MONITOR DETECT

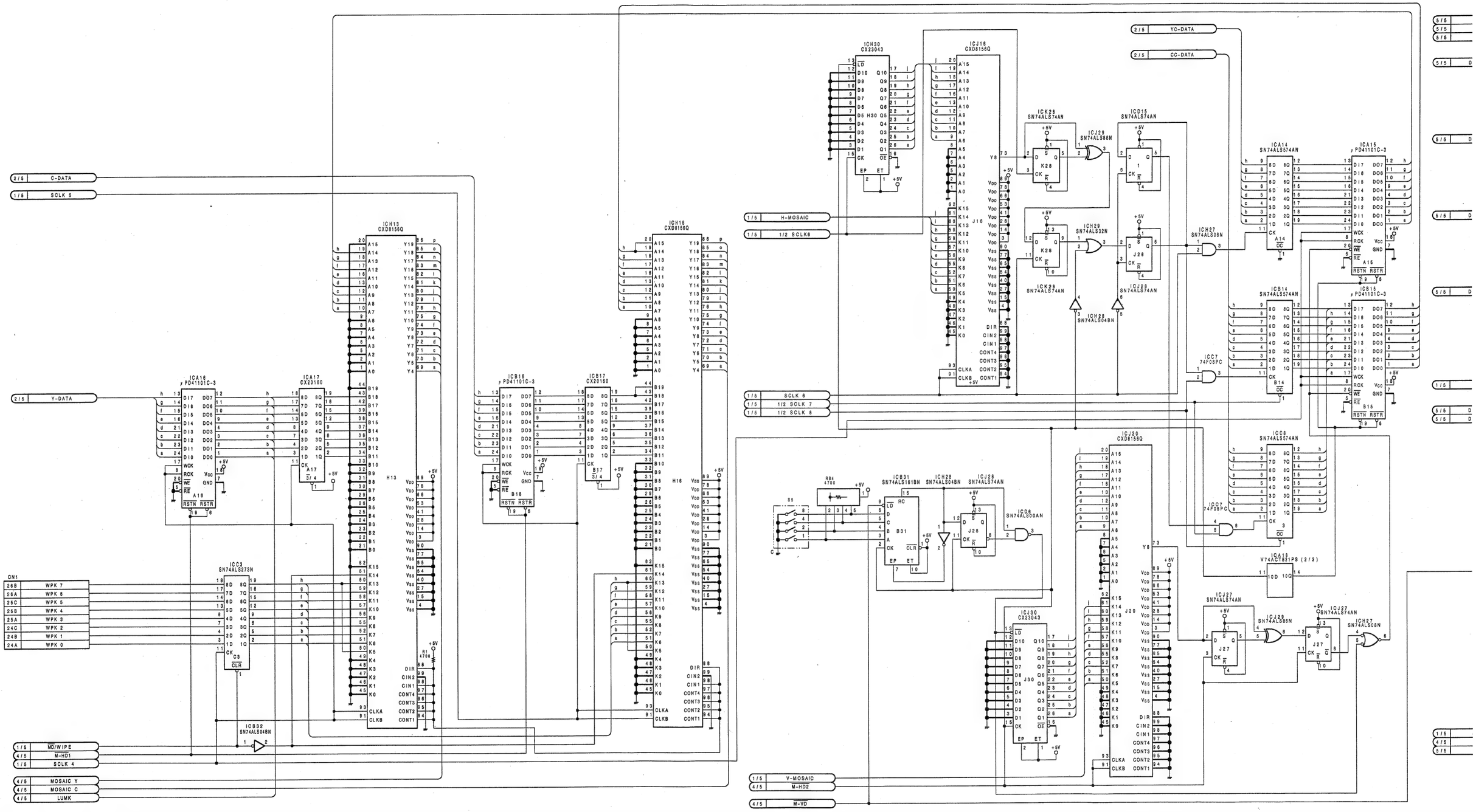

8-117 8-118

A B C D E F G H

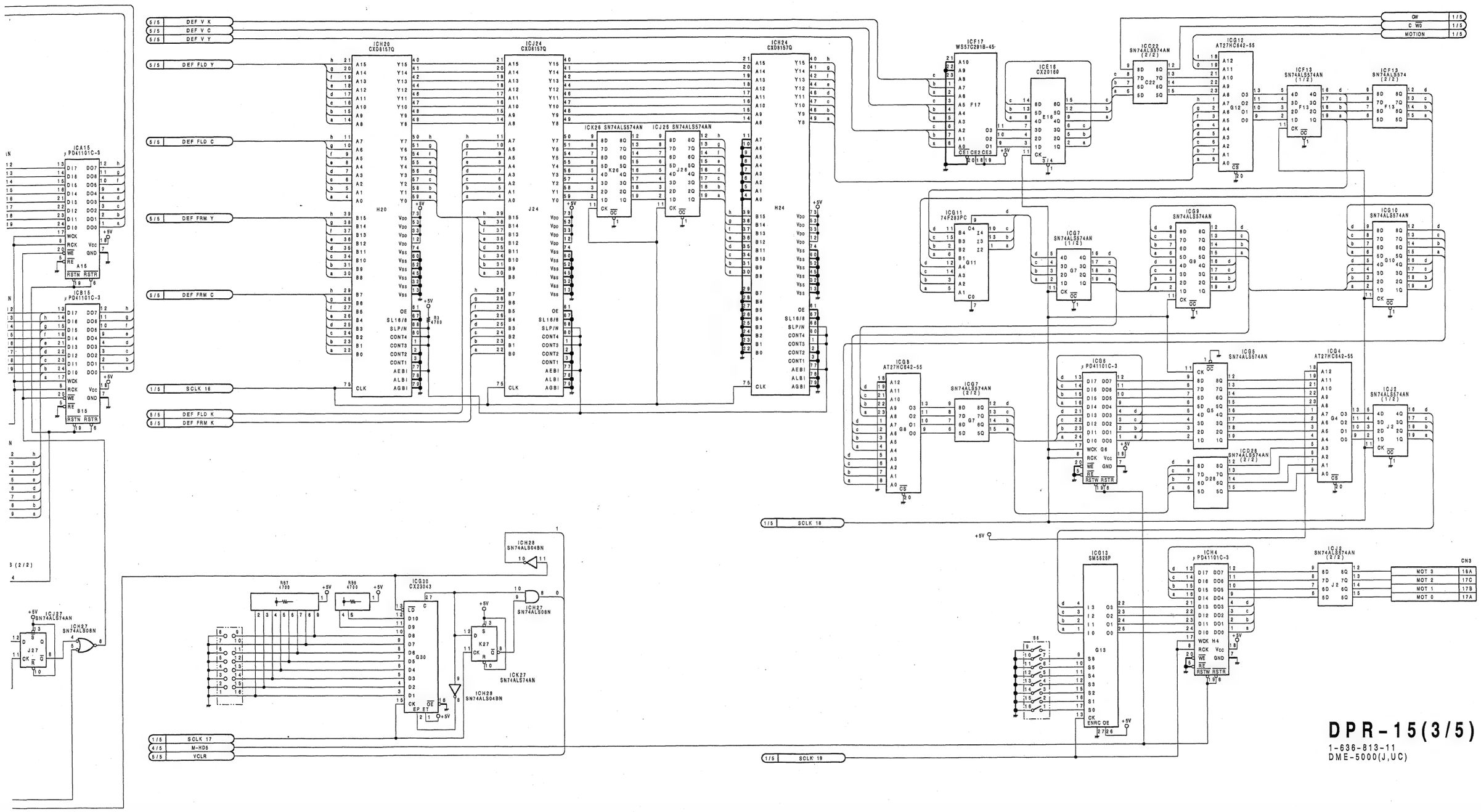

DPR-15(3/5)
1-636-813-11
DME-5000(J,UC)

DPR-15;INPUT PIXEL EFFECT GENERATOR AND MONITOR DETECT

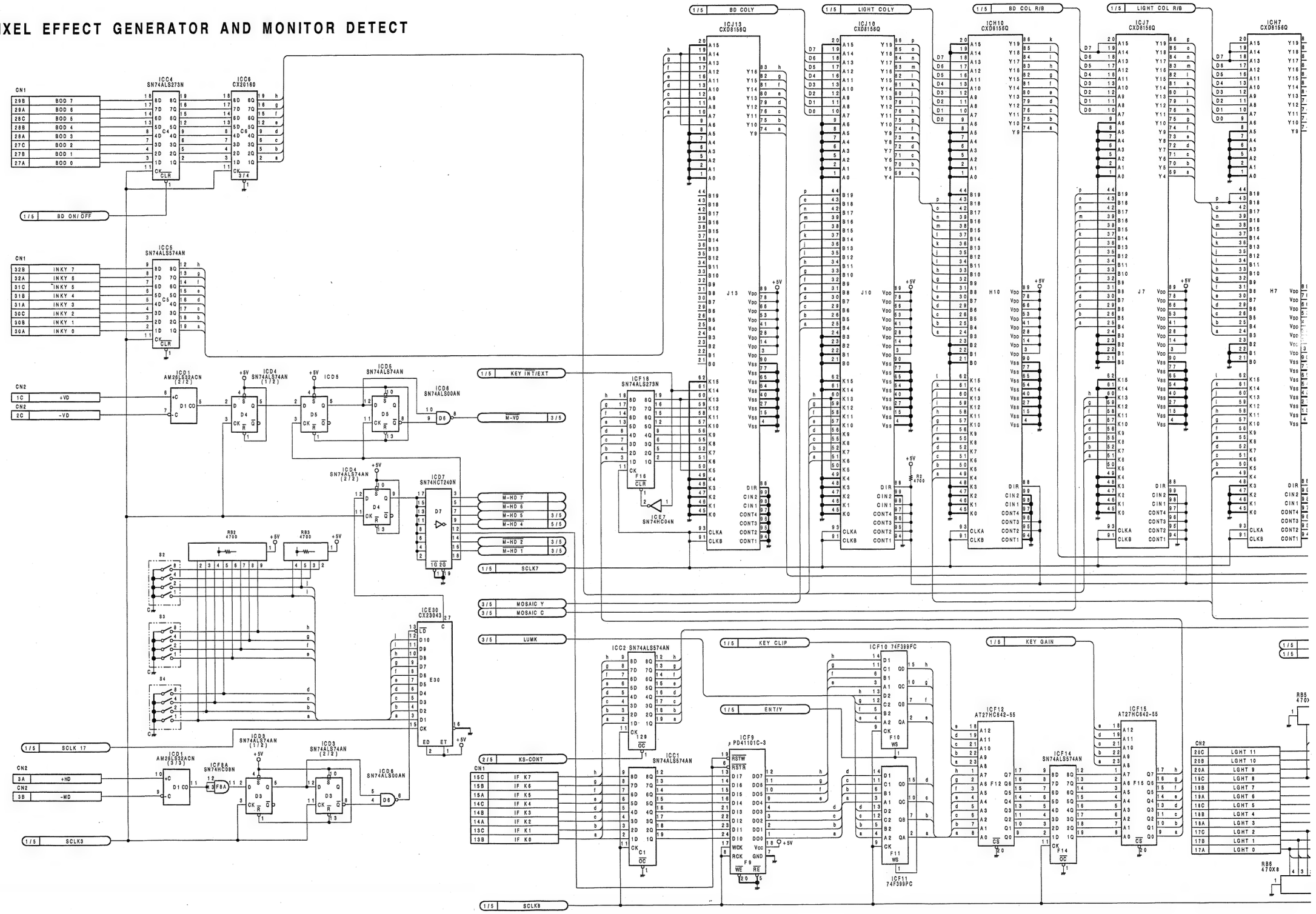

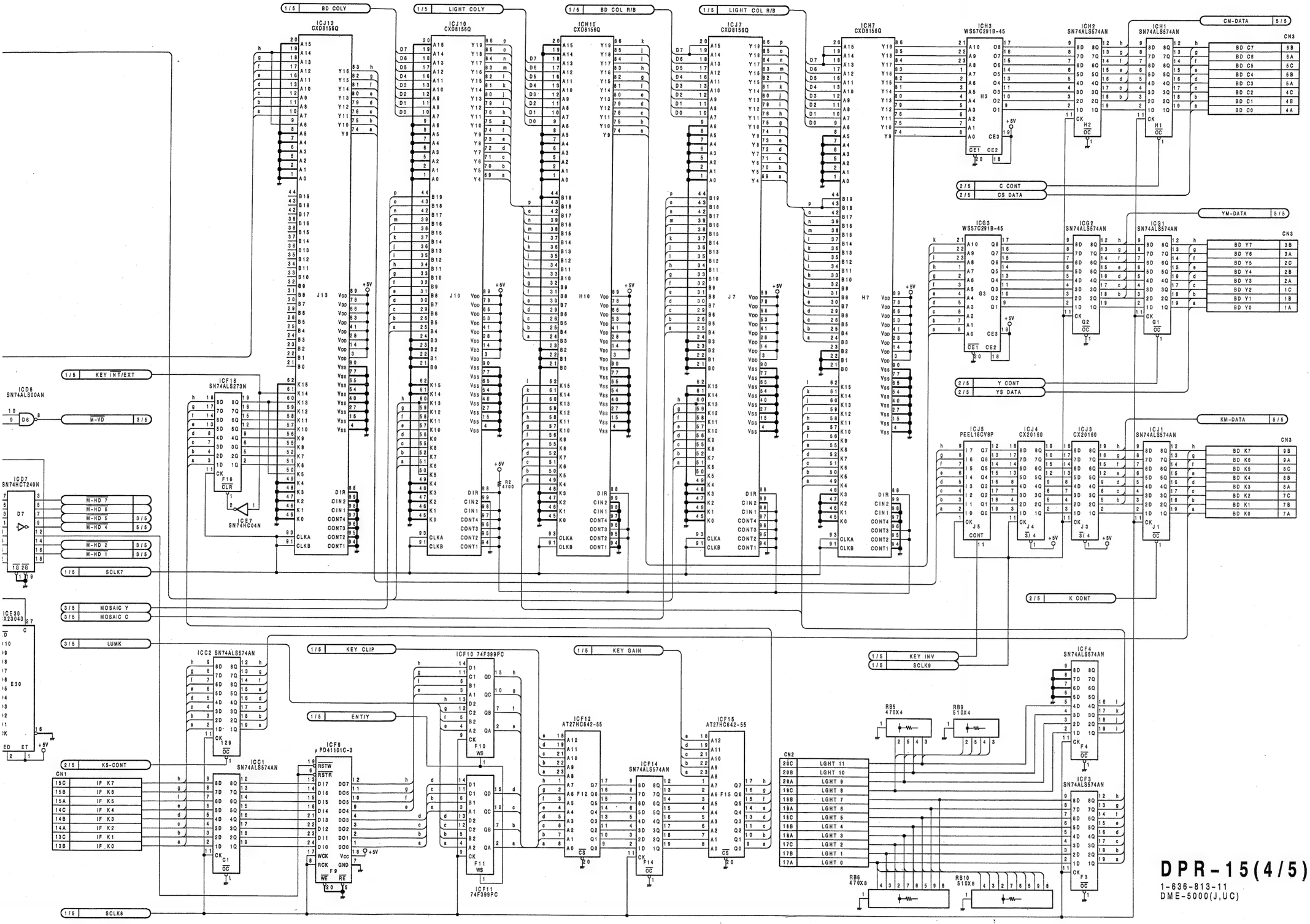

8-125

8-126

DPR-15(4/5)

1-636-813-11

DME-5000(J,UC)

E F G H I J K L

DPR-15;INPUT PIXEL EFFECT GENERATOR AND MONITOR DETECT

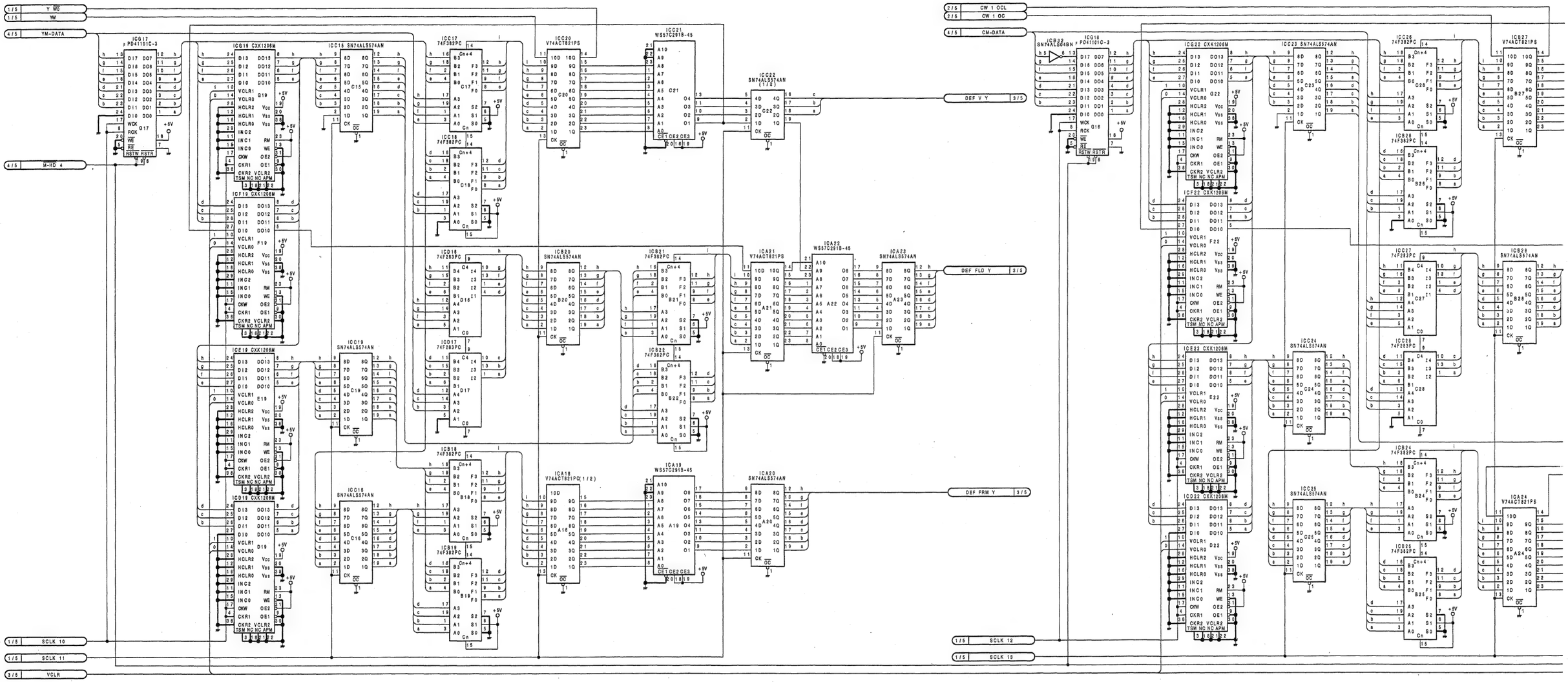

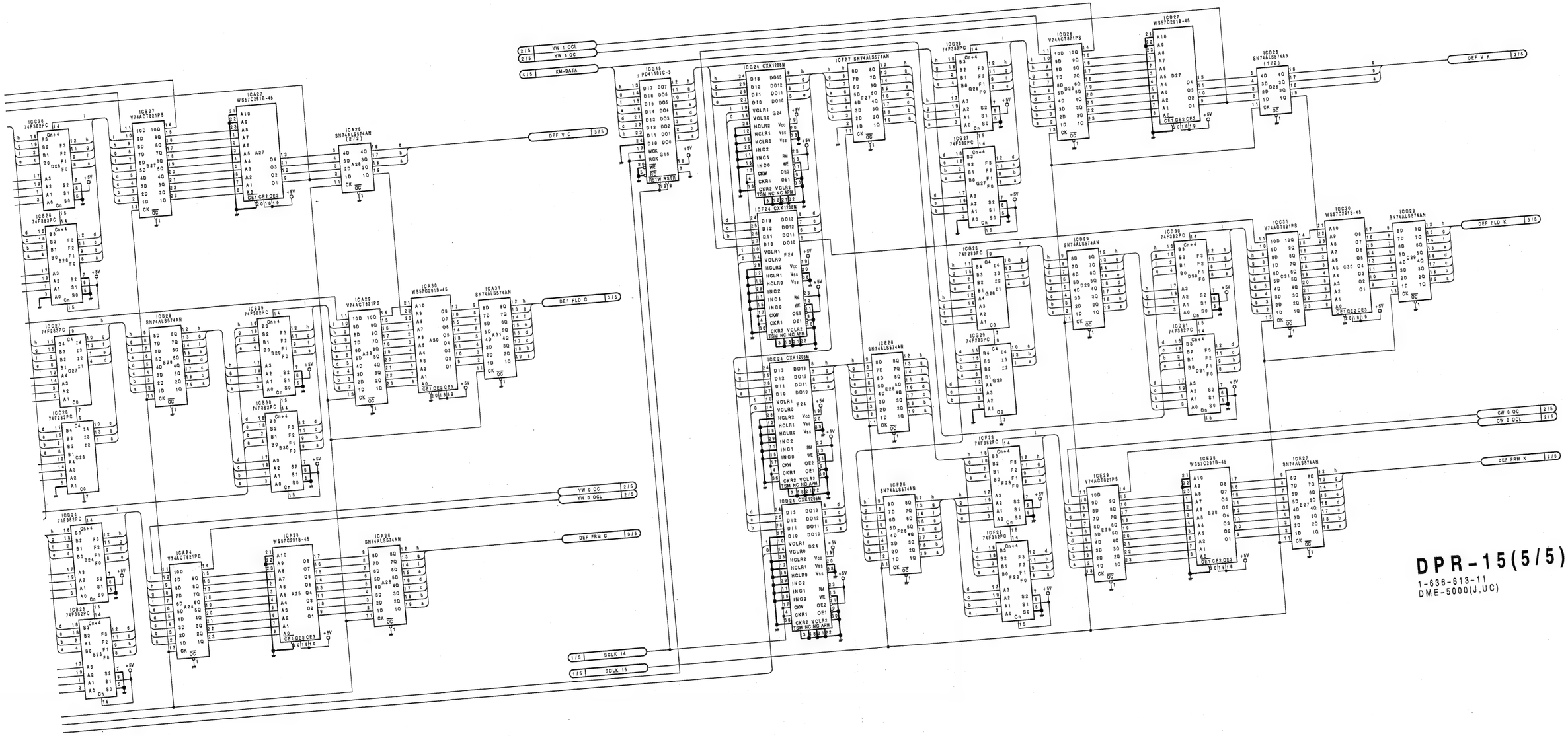

DPR-15(5/5)
1-636-813-11
DME-5000(J,UC)

DPR-16;OUTPUT RECURSIVE EFFECT GENERATOR AND BORDER GENERATOR

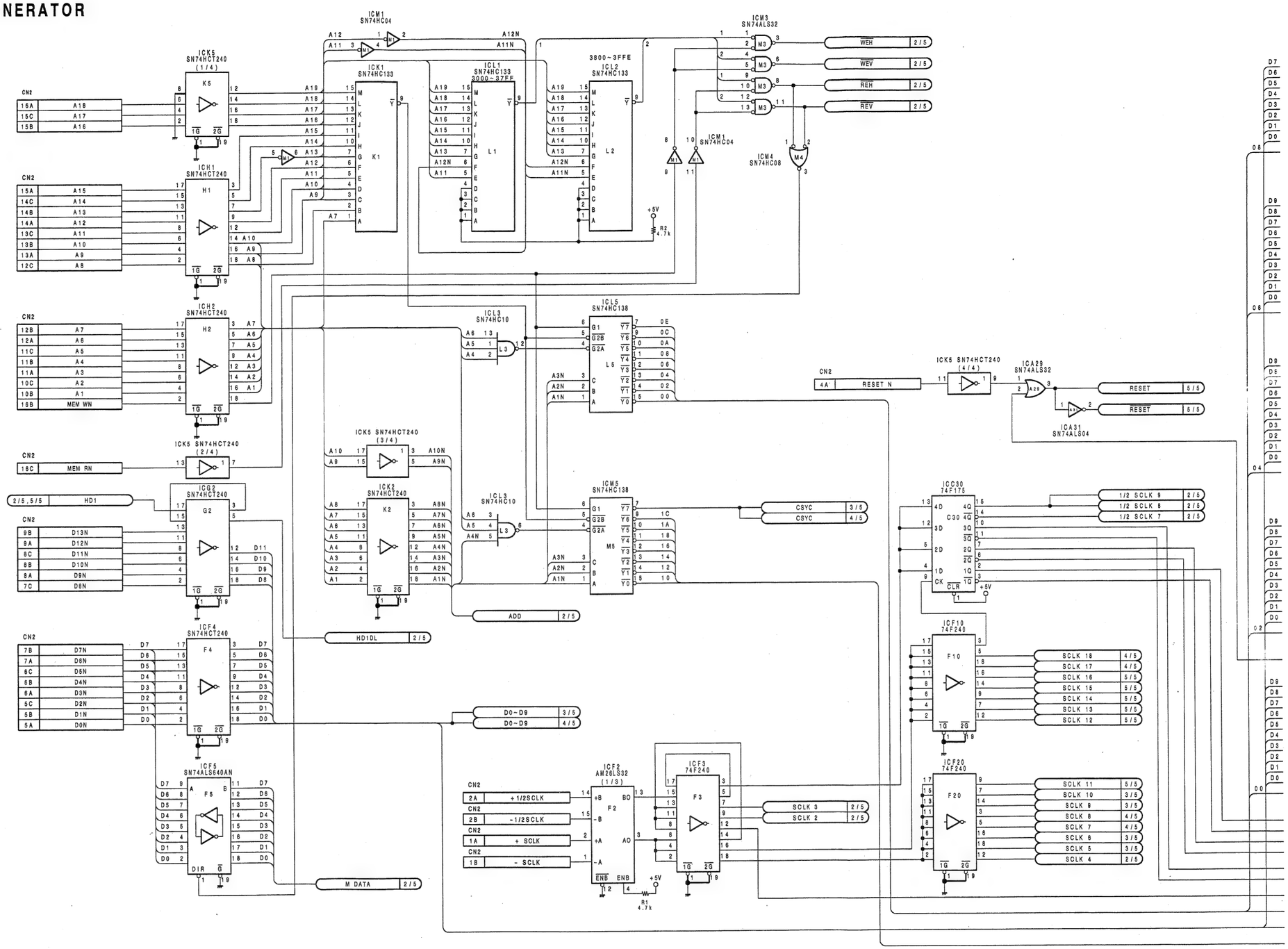

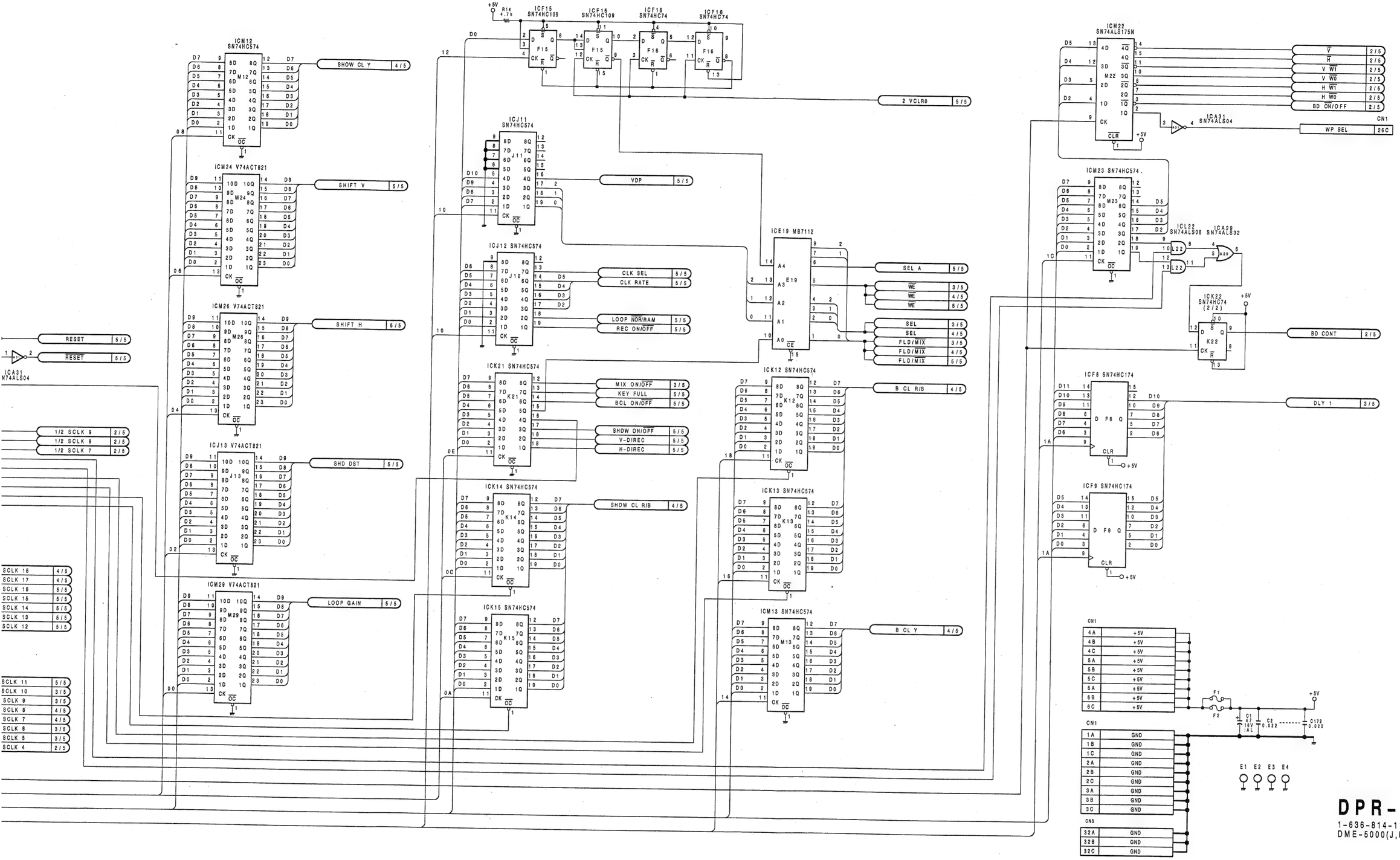

DPR-16(1/5)
1-636-814-11
DME-5000(J,UC)

DPR-16;OUTPUT RECURSIVE EFFECT GENERATOR AND BORDER GENERATOR

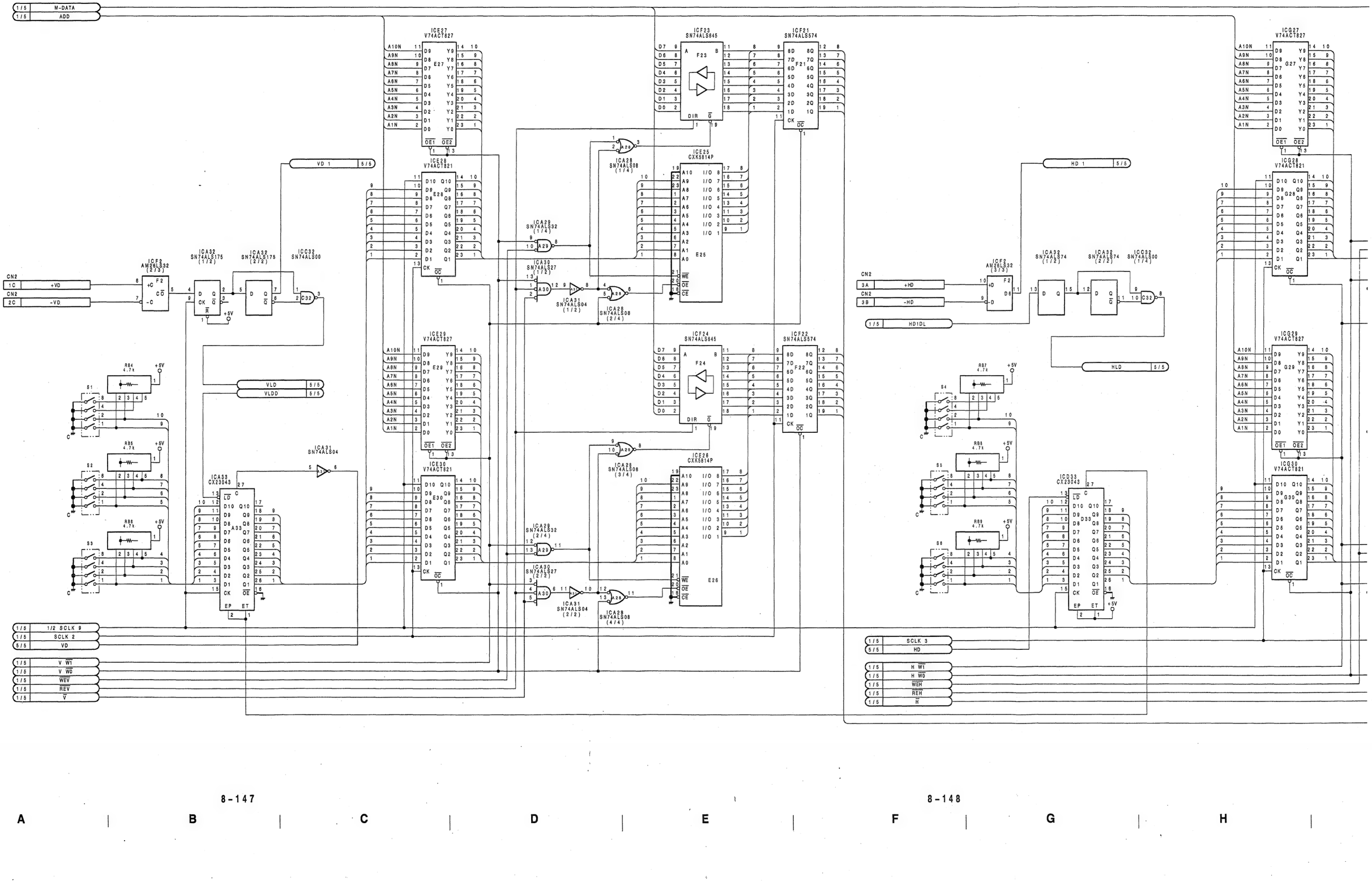

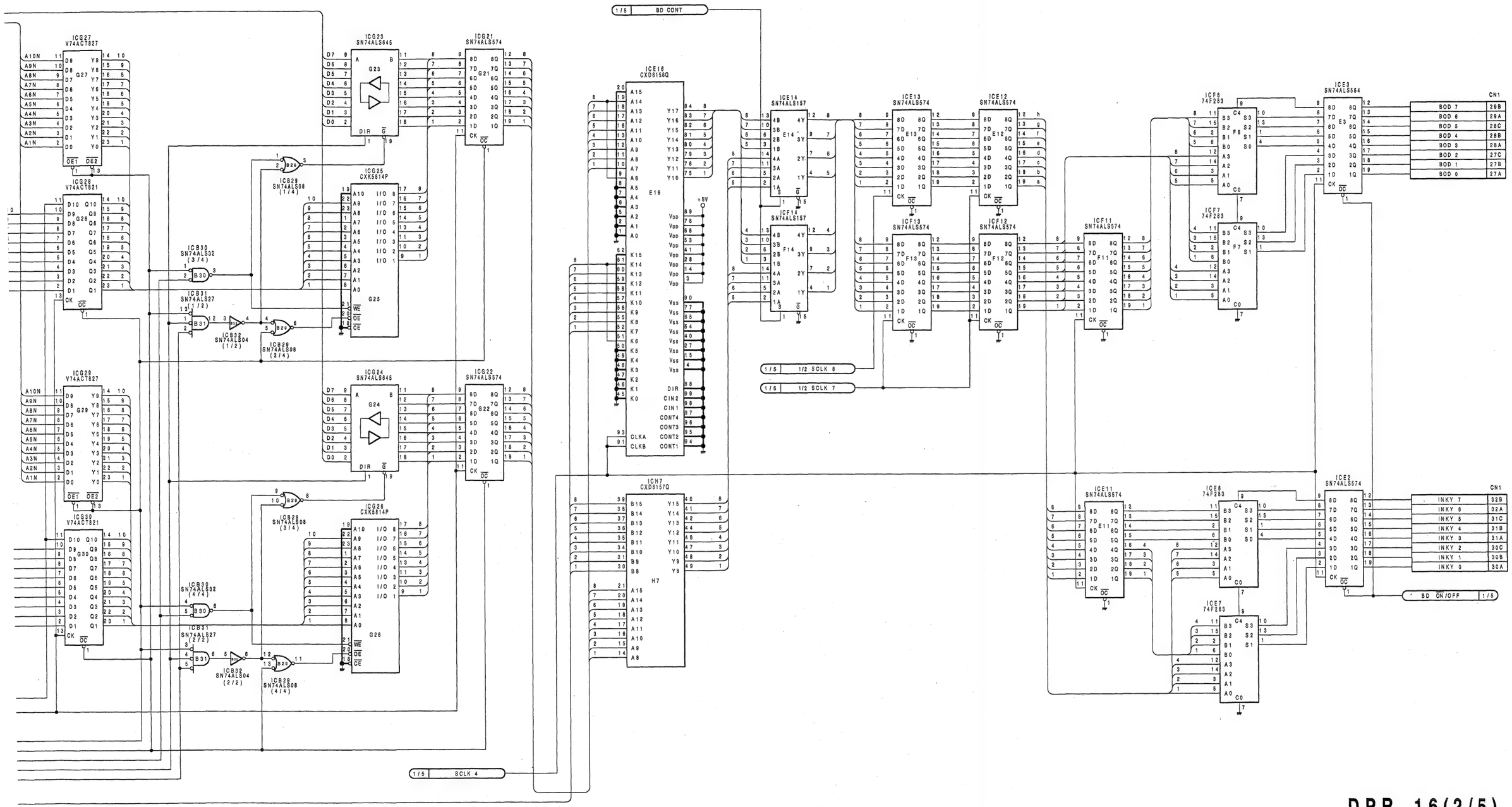

DPR-16(2/5)

1-636-814-11
DME-5000(J,UC)

DPR-16(3/5) DPR-16

DPR-16;OUTPUT RECURSIVE EFFECT GENERATOR AND BORDER GENERATOR

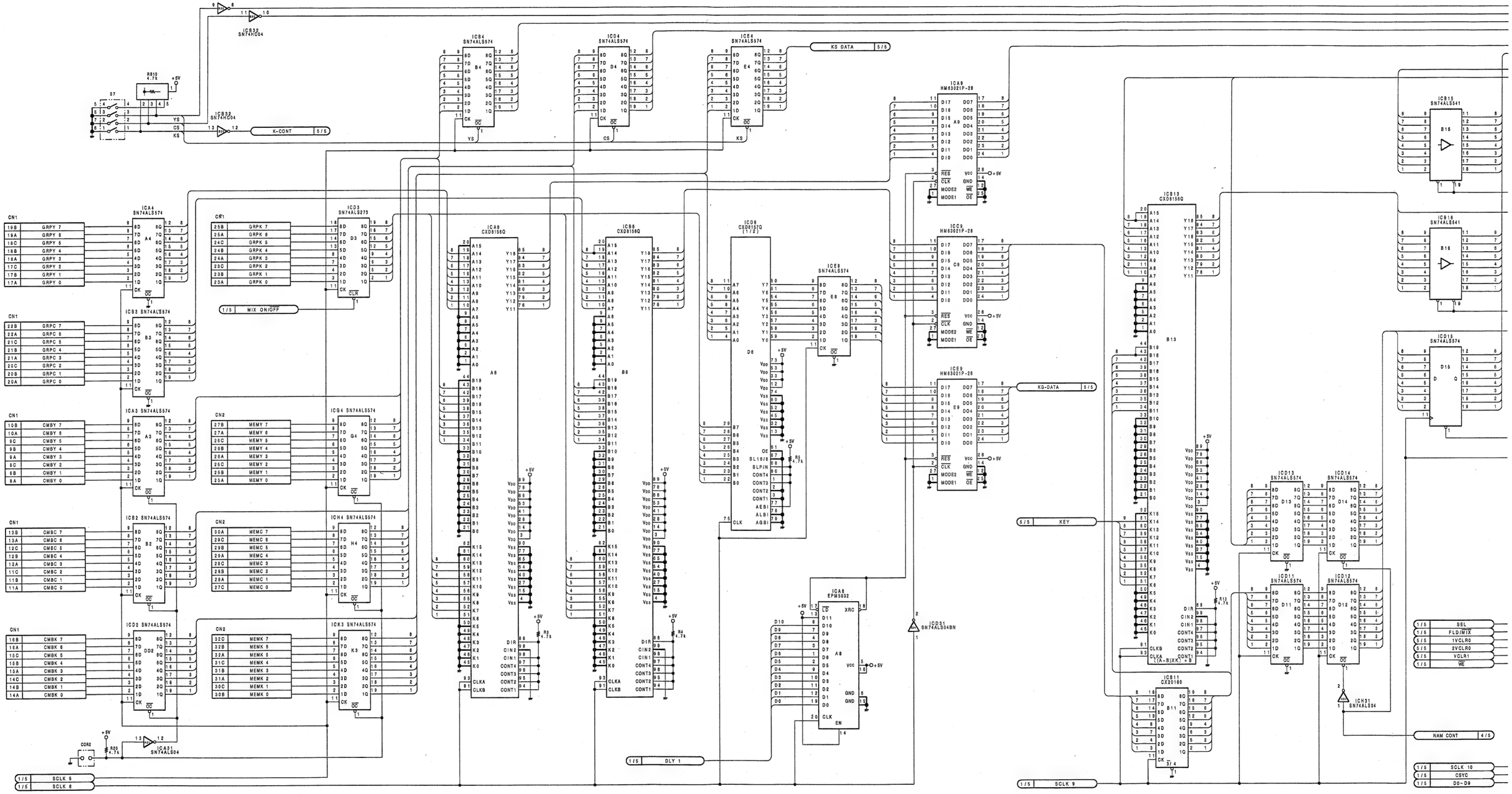

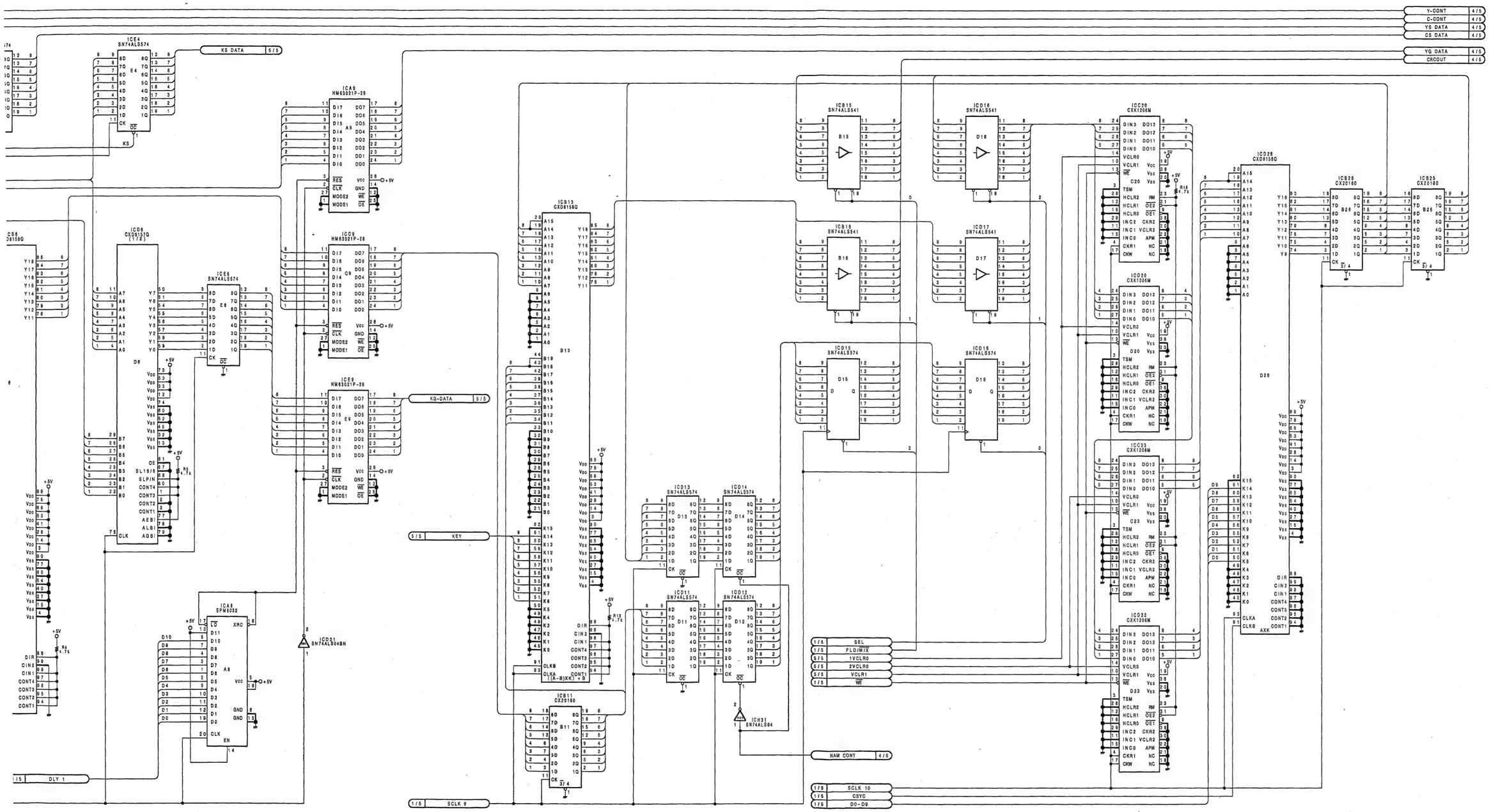
Y-CONT 4/5
C-CONT 4/5
YS DATA 4/5
CS DATA 4/5
YG DATA 4/5
CRCOUT 4/5
KS DATA 5/5
KG-DATA 5/5
KEY 6/5
SEL 1/5
FLD/MIX 5/5
1VCLR0 5/5
2VCLR0 5/5
VCLR1 5/5
WE 1/5
NAM CONT 4/5
SCLK 10 1/5
CSYC 1/5
D0-D9 1/5
DLY 1 1/5
SCLK 9 1/5
ICE4 SN74ALS574
ICA9 HM63021P-28
ICC8 CX20157Q (1/2)
ICE8 SN74ALS574
ICA8 EPM5032
ICD31 SN74ALS04BN
ICB13 CXD8159Q
ICB11 CX20160
ICD13 SN74ALS574
ICD14 SN74ALS574
ICD11 SN74ALS574
ICD12 SN74ALS574
ICH31 SN74ALS04
ICB15 SN74ALS541
ICB16 SN74ALS541
ICD15 SN74ALS574
ICD16 SN74ALS541
ICD17 SN74ALS541
ICD18 SN74ALS574
ICC20 CXK1206M
ICC23 CXK1206M
ICD28 CXD8159Q
ICB28 CX20160
ICB25 CX20160

DPR-16;OUTPUT RECURSIVE EFFECT GENERATOR AND BORDER GENERATOR

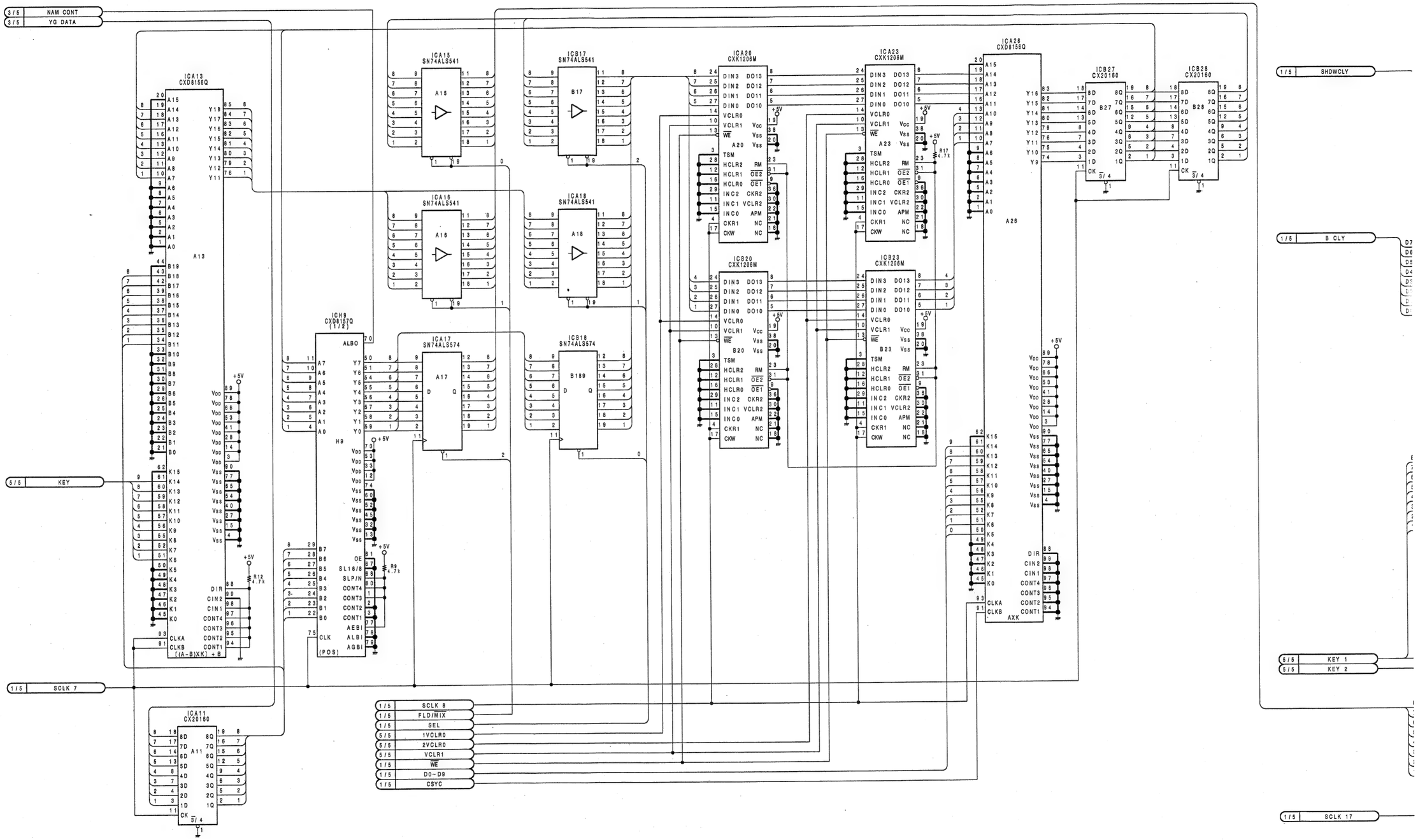

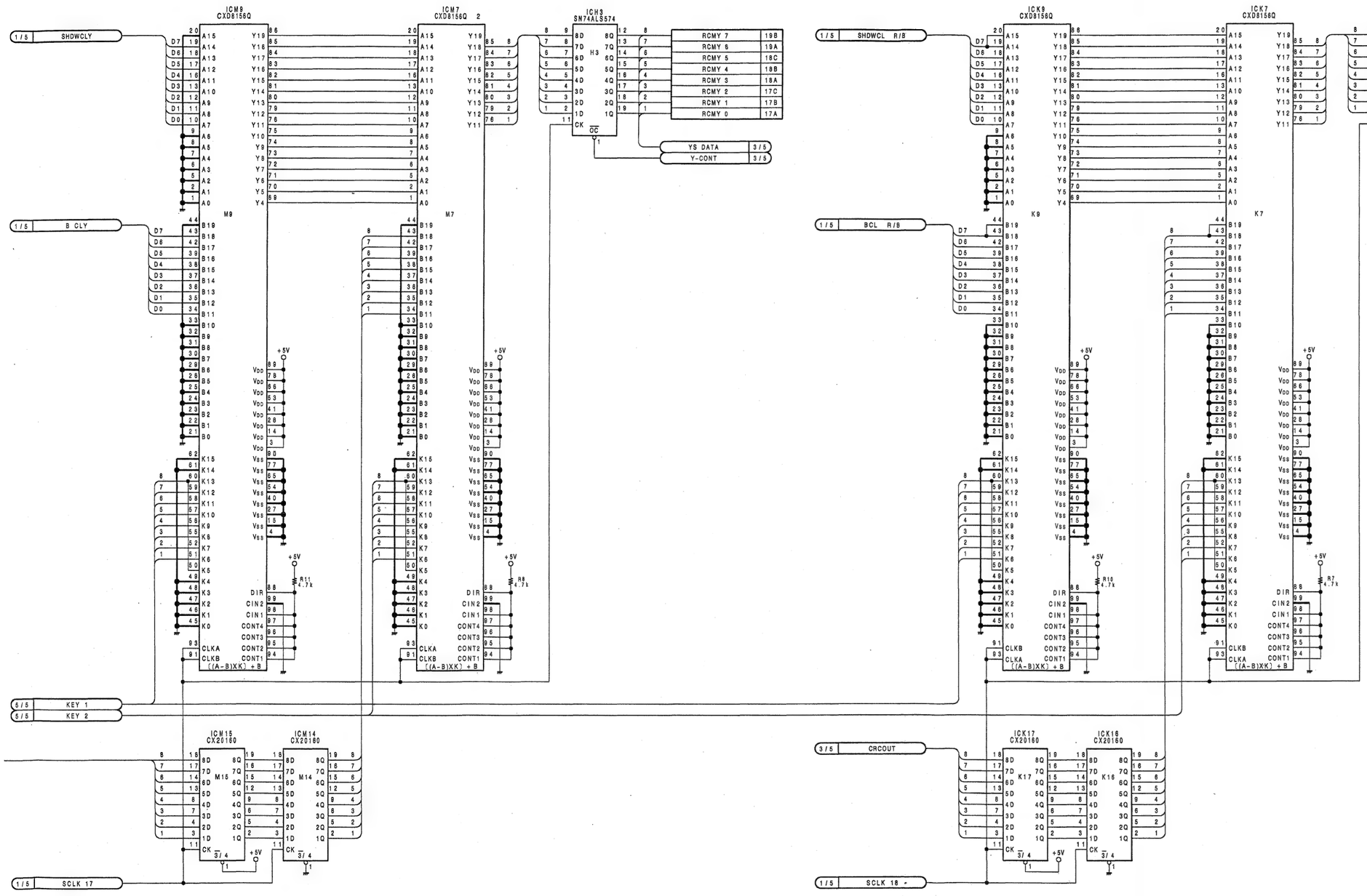

DPR-16(4/5)
1-636-814-11
DME-5000(J,UC)

DPR-16;OUTPUT RECURSIVE EFFECT GENERATOR AND BORDER GENERATOR

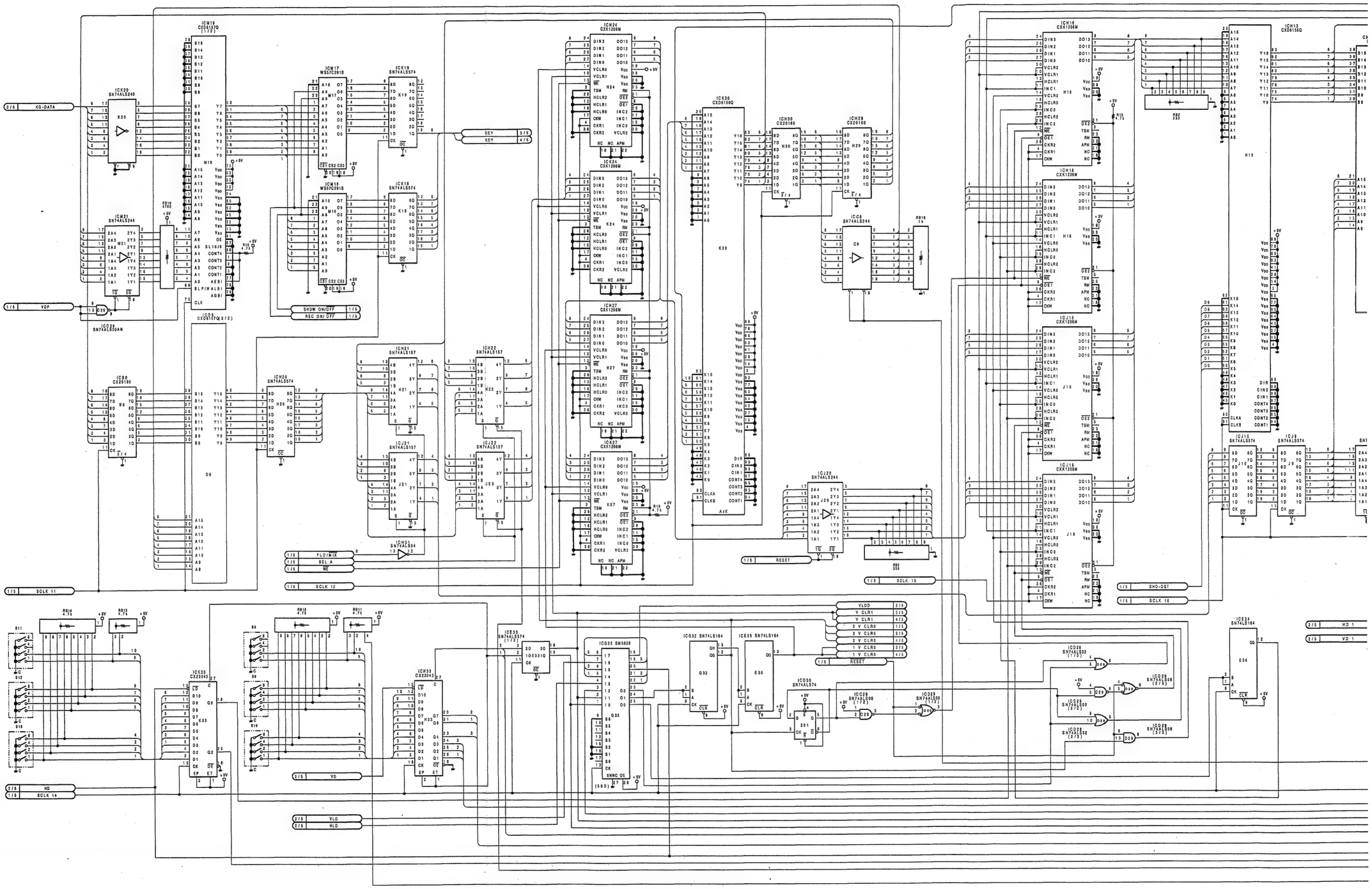

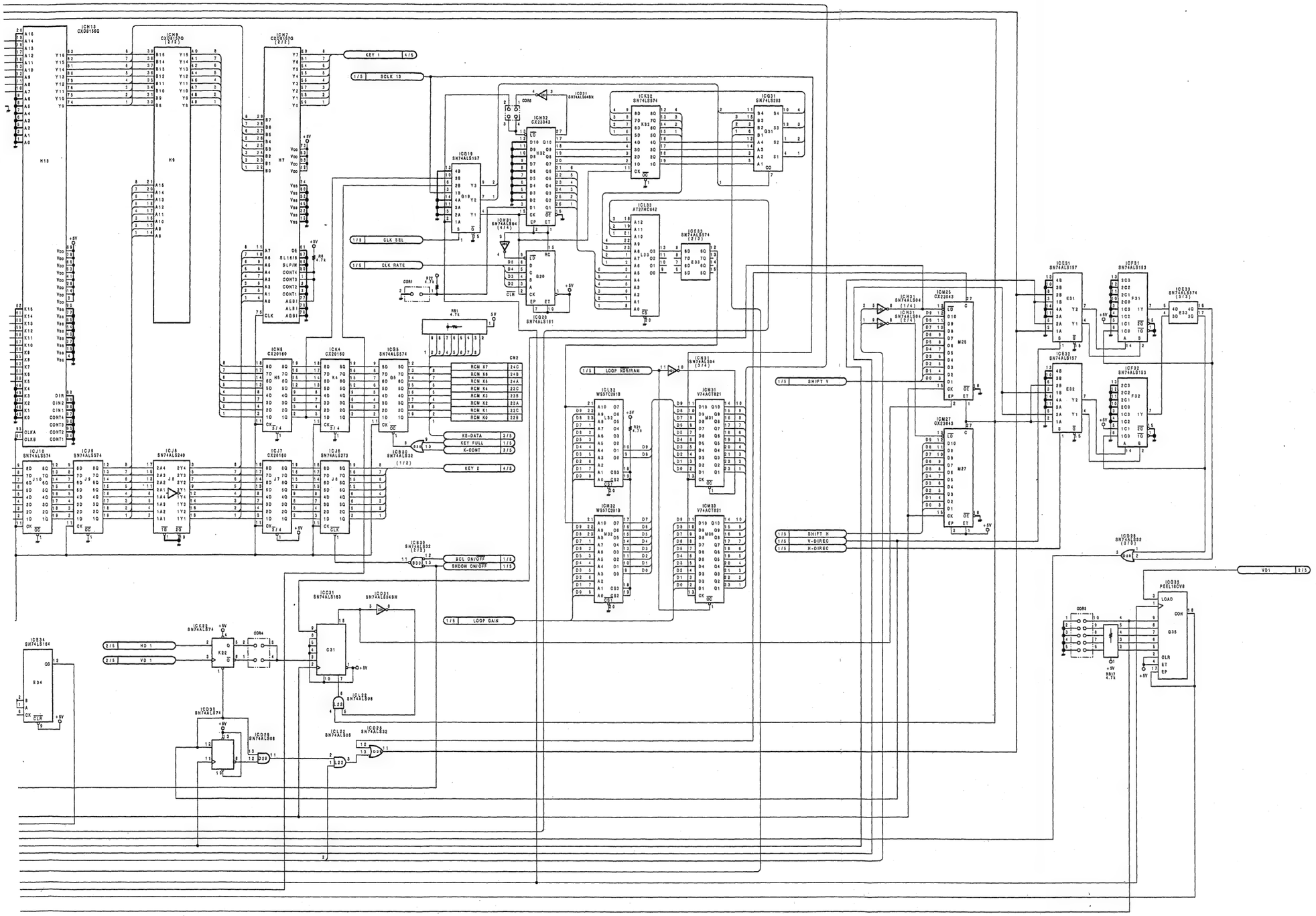
KEY 1
SCLK 13
CLK SEL
CLK RATE
LOOP NOR/RAM
LOOP GAIN
SHIFT V
SHIFT H
V-DIREC
H-DIREC
HD 1
VD 1
KEY 2
K0-DATA
KEY FULL
K-CONT
BCL ON/OFF
SHDW ON/OFF
RCM X7
RCM X6
RCM X5
RCM X4
RCM X3
RCM X2
RCM X1
RCM X0
SN74ALS574
SN74ALS240
SN74ALS273
SN74ALS157
SN74ALS193
SN74ALS164
SN74ALS08
SN74ALS32
SN74ALS04
SN74ALS00
SN74ALS74
CXD1157Q
CXD1185Q
CXD2043
CXD2045
CXD2046
CXD2047
CXD2048
CXD2049
CXD2050
CXD2051
CXD2052
CXD2053
CXD2054
CXD2055
CXD2056
CXD2057
CXD2058
CXD2059
CXD2060
CXD2061
CXD2062
CXD2063
CXD2064
CXD2065
CXD2066
CXD2067
CXD2068
CXD2069
CXD2070
CXD2071
CXD2072
CXD2073
CXD2074
CXD2075
CXD2076
CXD2077
CXD2078
CXD2079
CXD2080
CXD2081
CXD2082
CXD2083
CXD2084

DPR-17;MEMORY ADDRESS SELECTOR AND WRITE ADDRESS GENERATOR

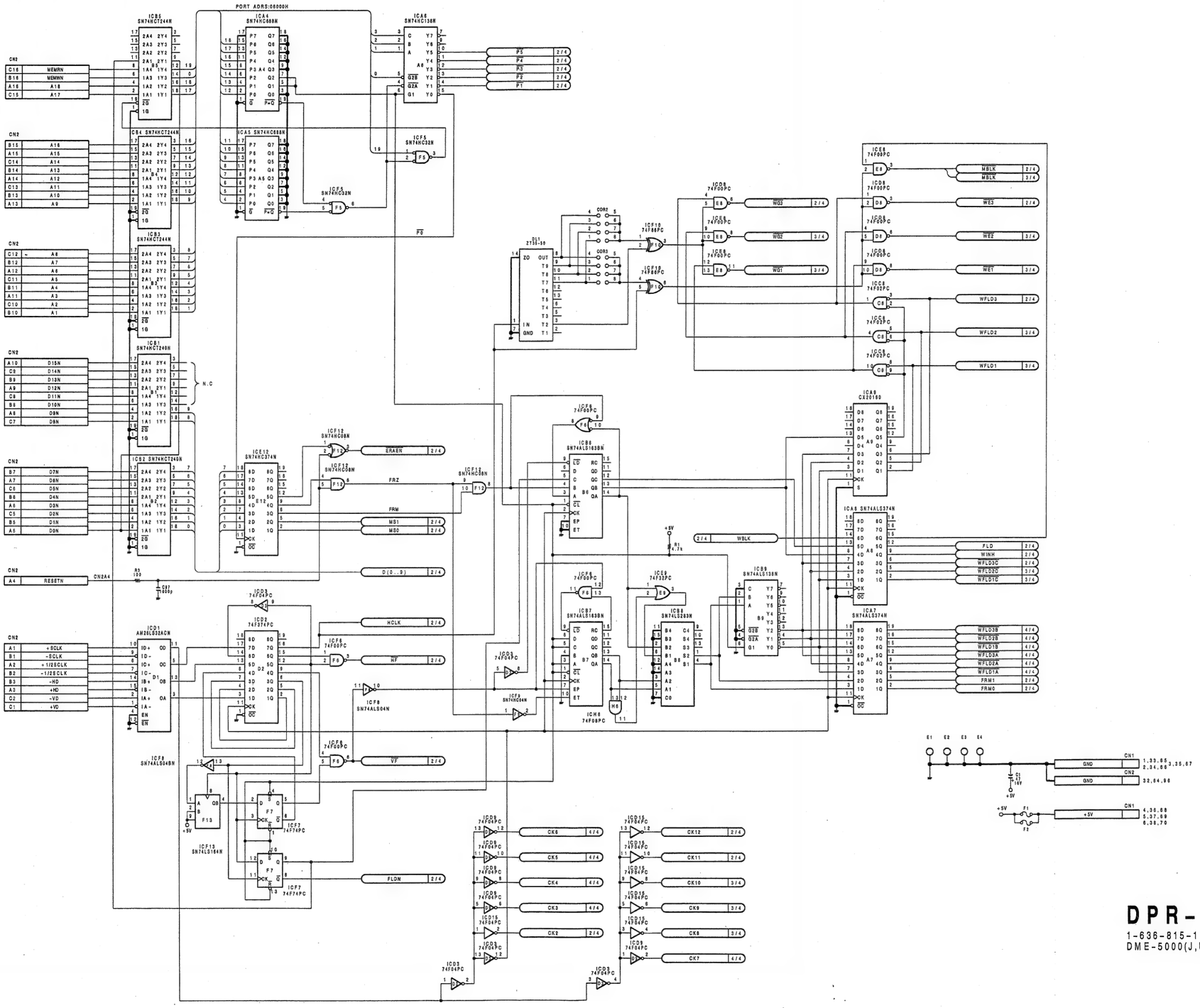

DPR-17(1/4)
1-636-815-11
DME-5000(J,UC)

DPR-17;MEMORY ADDRESS SELECTOR AND WRITE ADDRESS GENERATOR

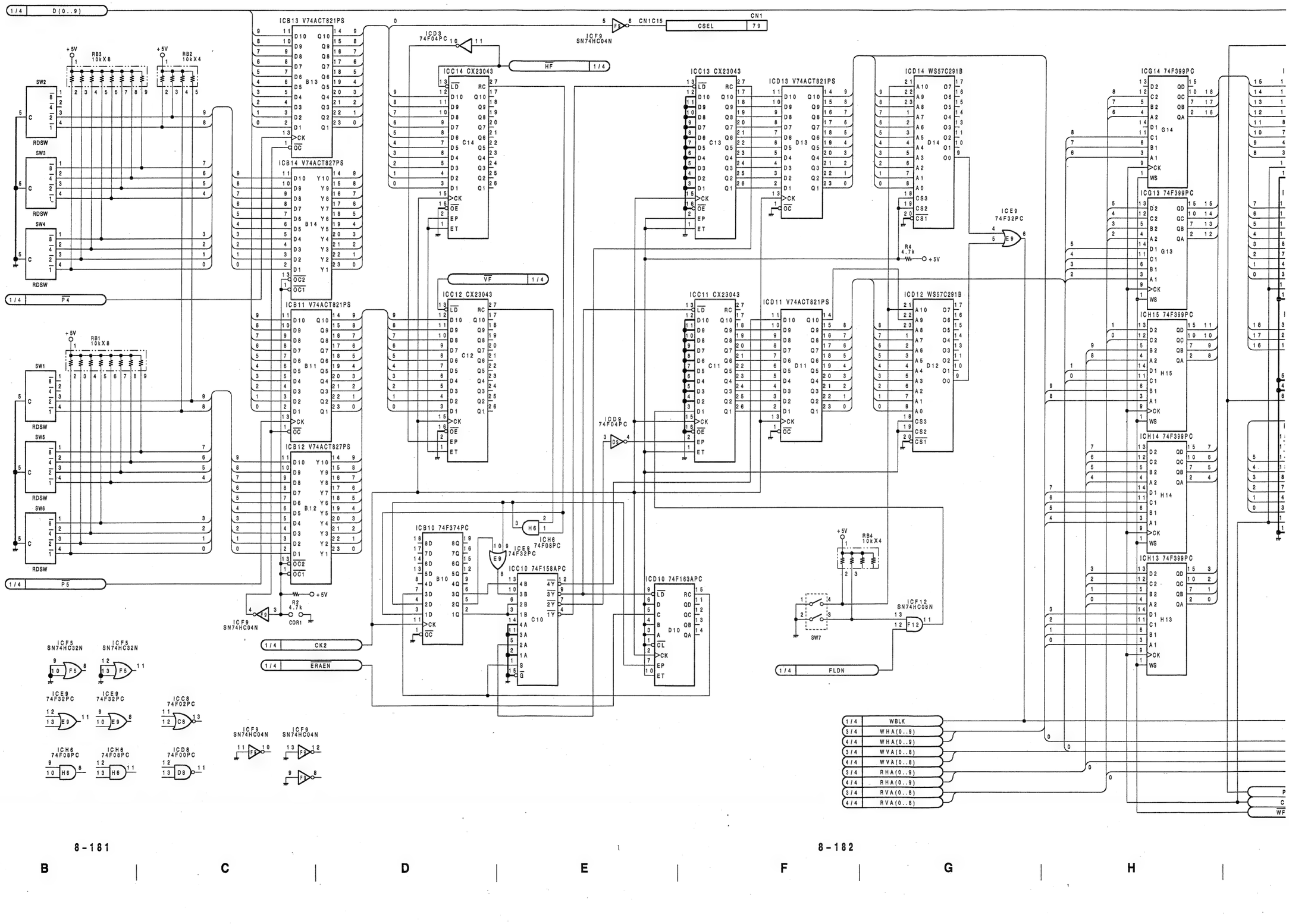

8-181 8-182

A B C D E F G H

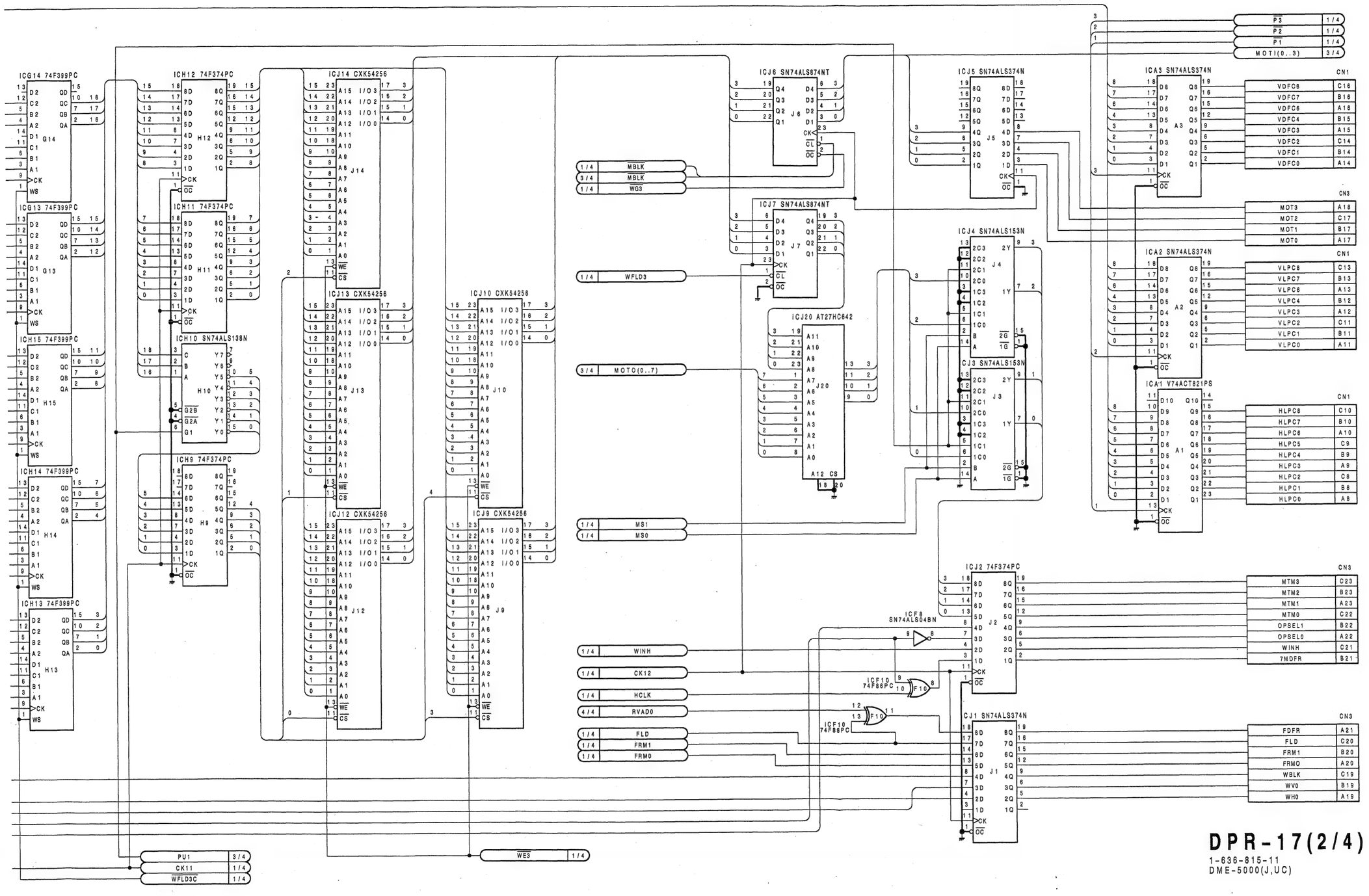

DPR-17(2/4)

1-636-815-11
DME-5000(J,UC)

DPR-17;MEMORY ADDRESS SELECTOR AND WRITE ADDRESS GENERATOR

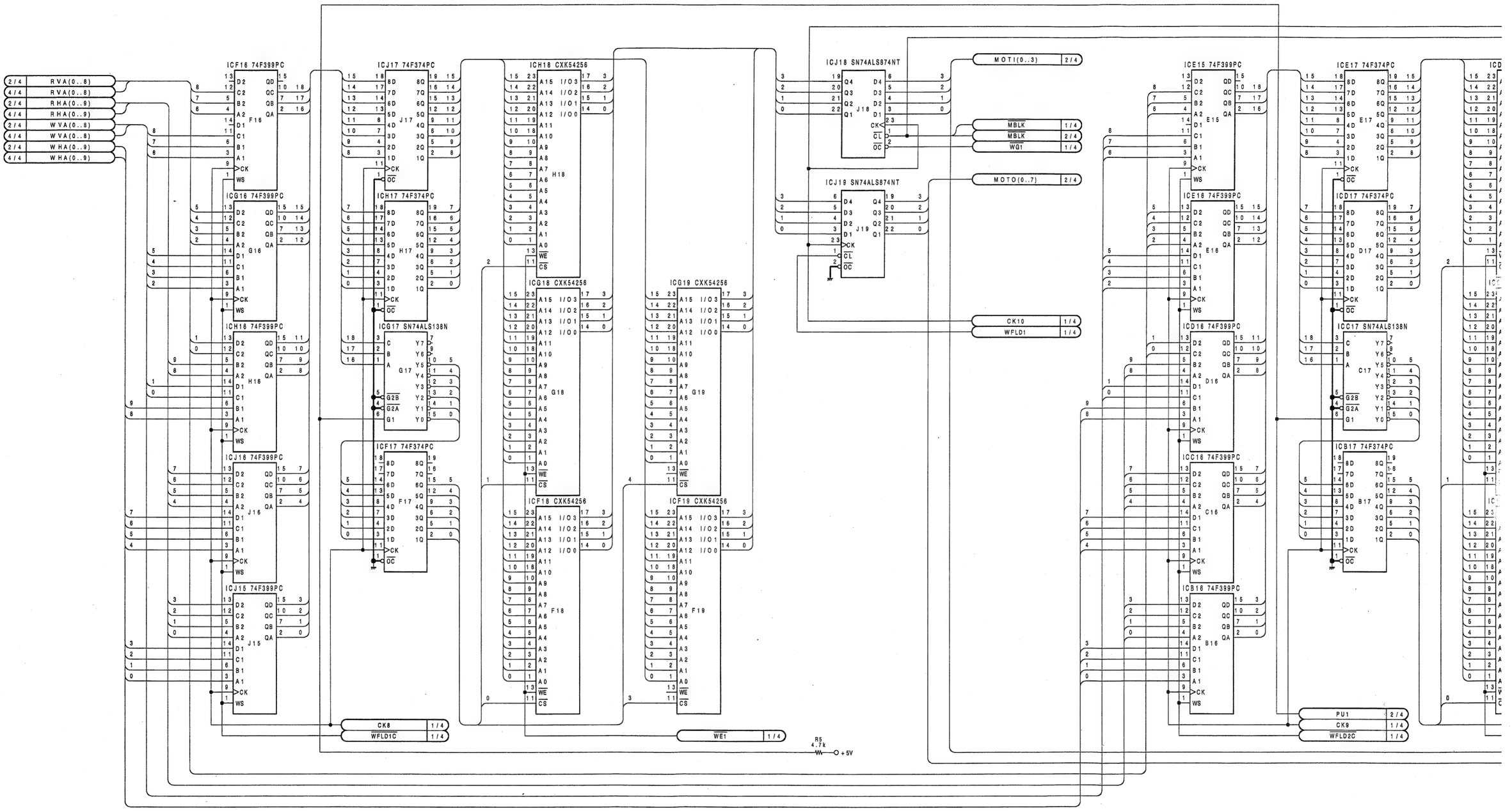

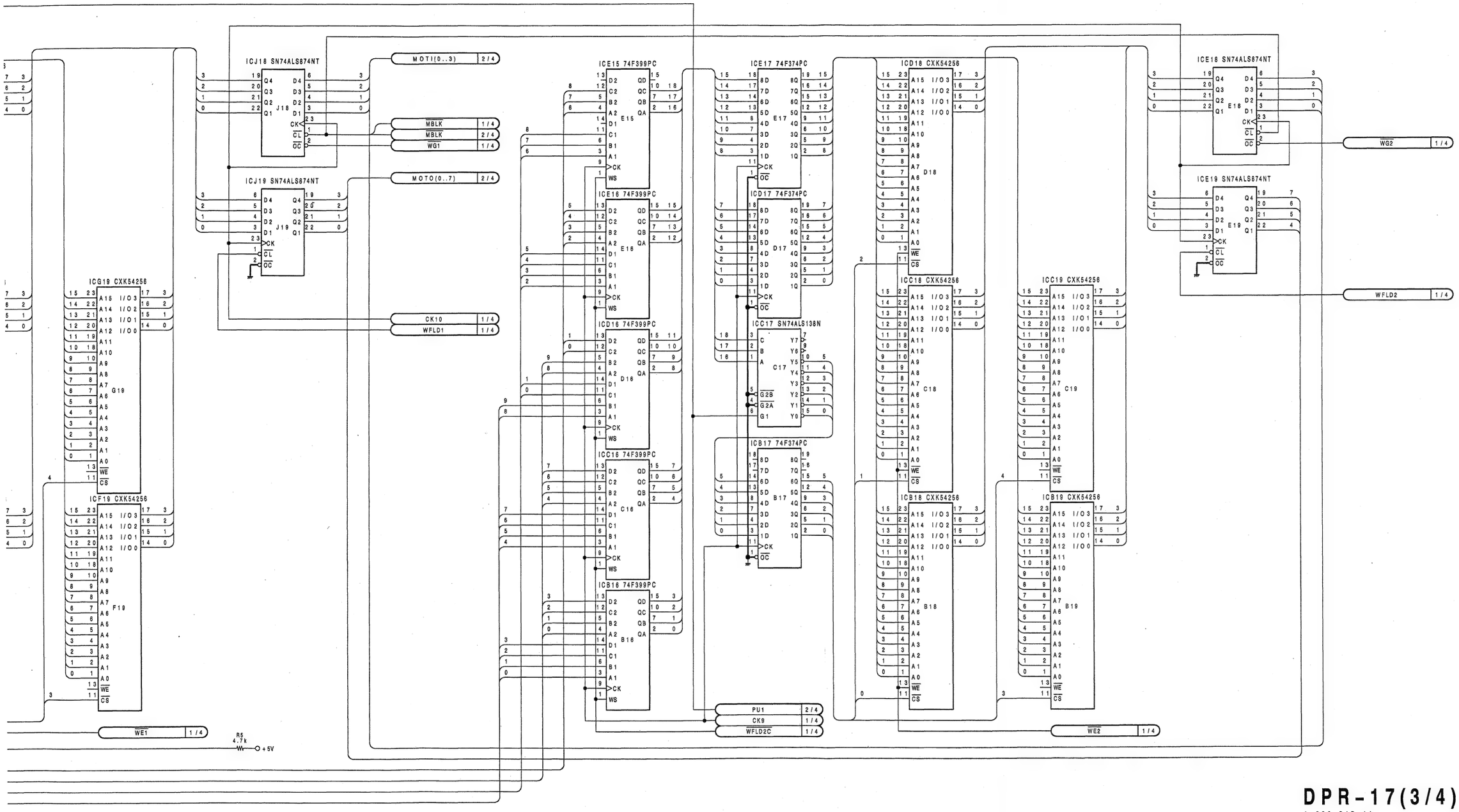

DPR-17(3/4)

1-636-815-11
DME-5000(J,UC)

DPR-17;MEMORY ADDRESS SELECTOR AND WRITE ADDRESS GENERATOR

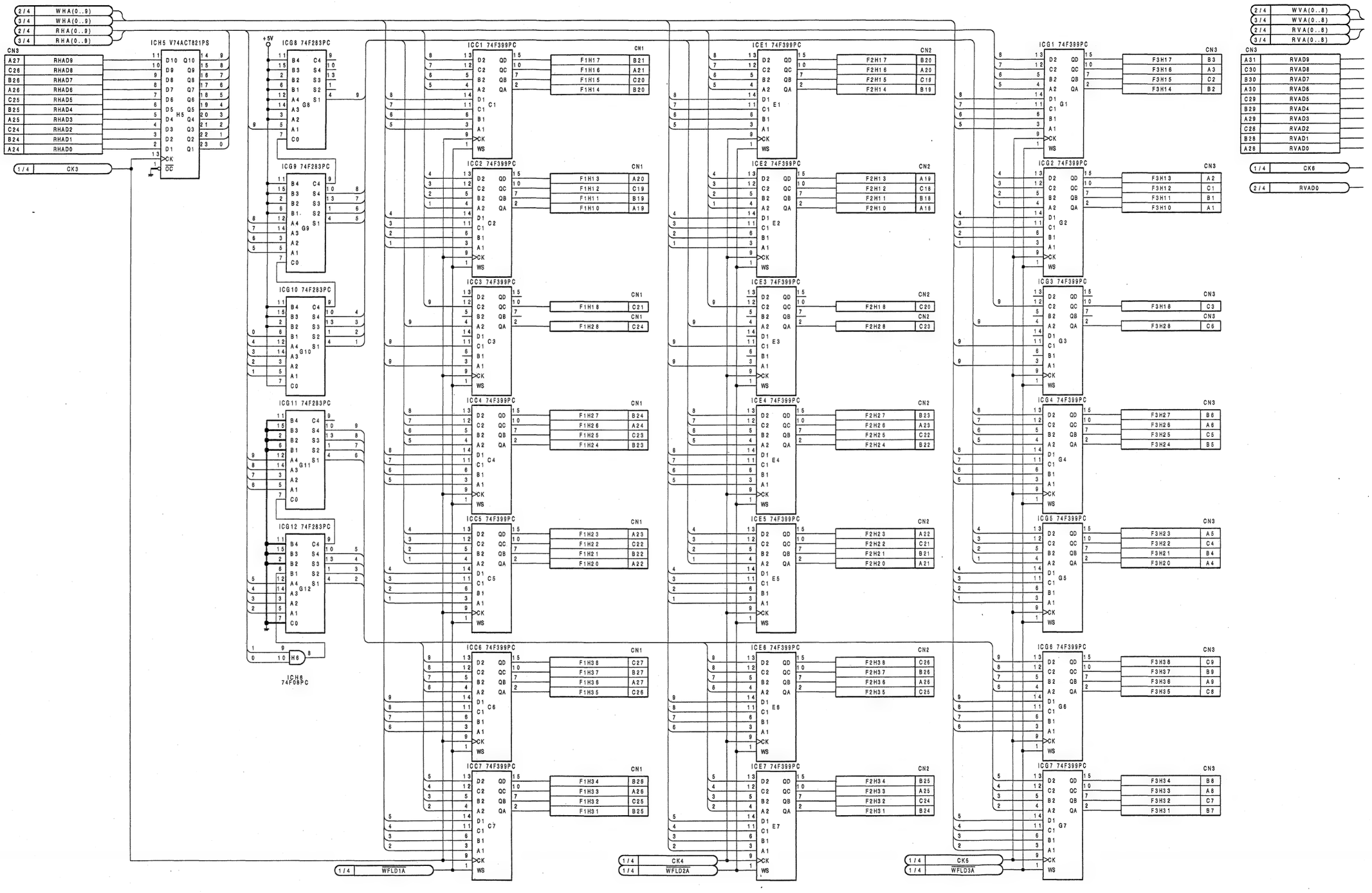

A | B | C | D | E | F | G | H

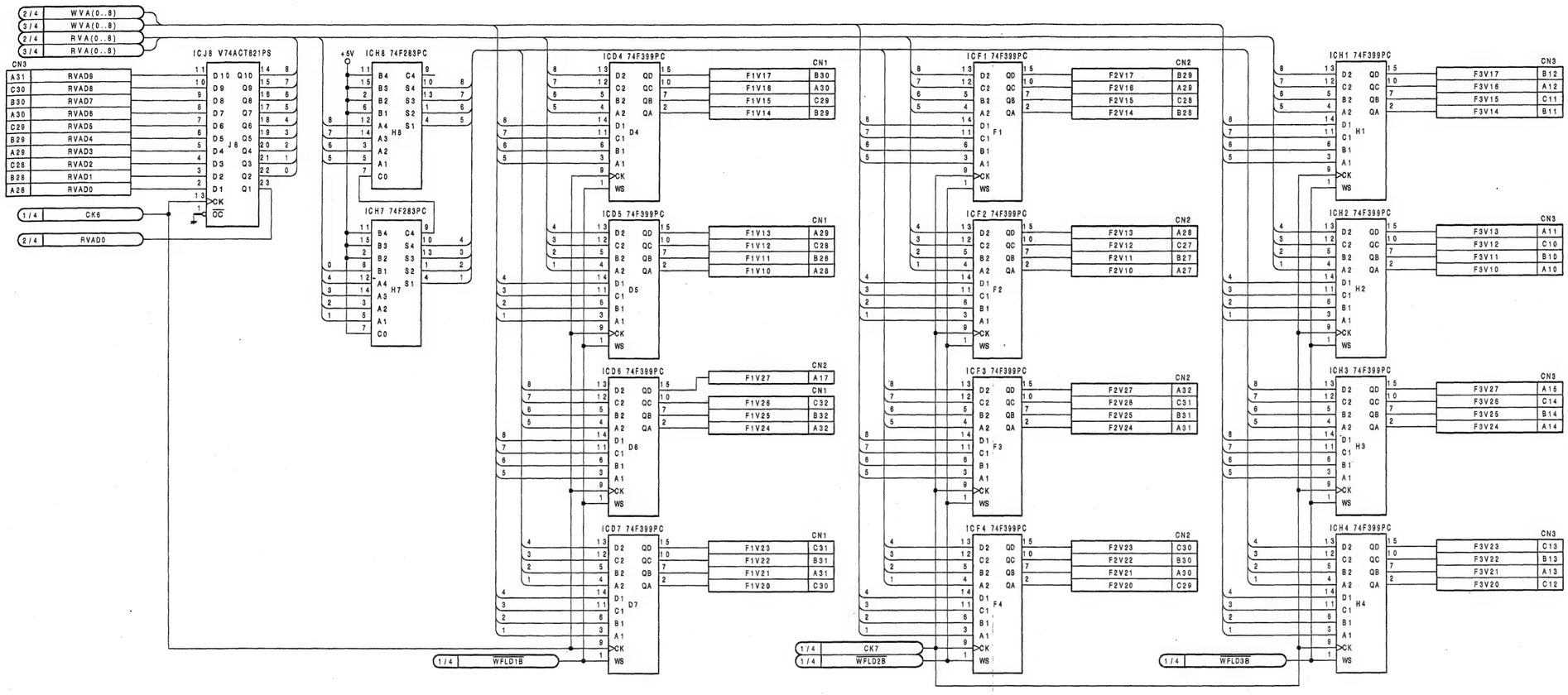

DPR-17(4/4)
1-636-815-11
DME-5000(J,UC)

DPR-18;READ ADDRESS GENERATOR AND SPLIT MIRROR GENERATOR

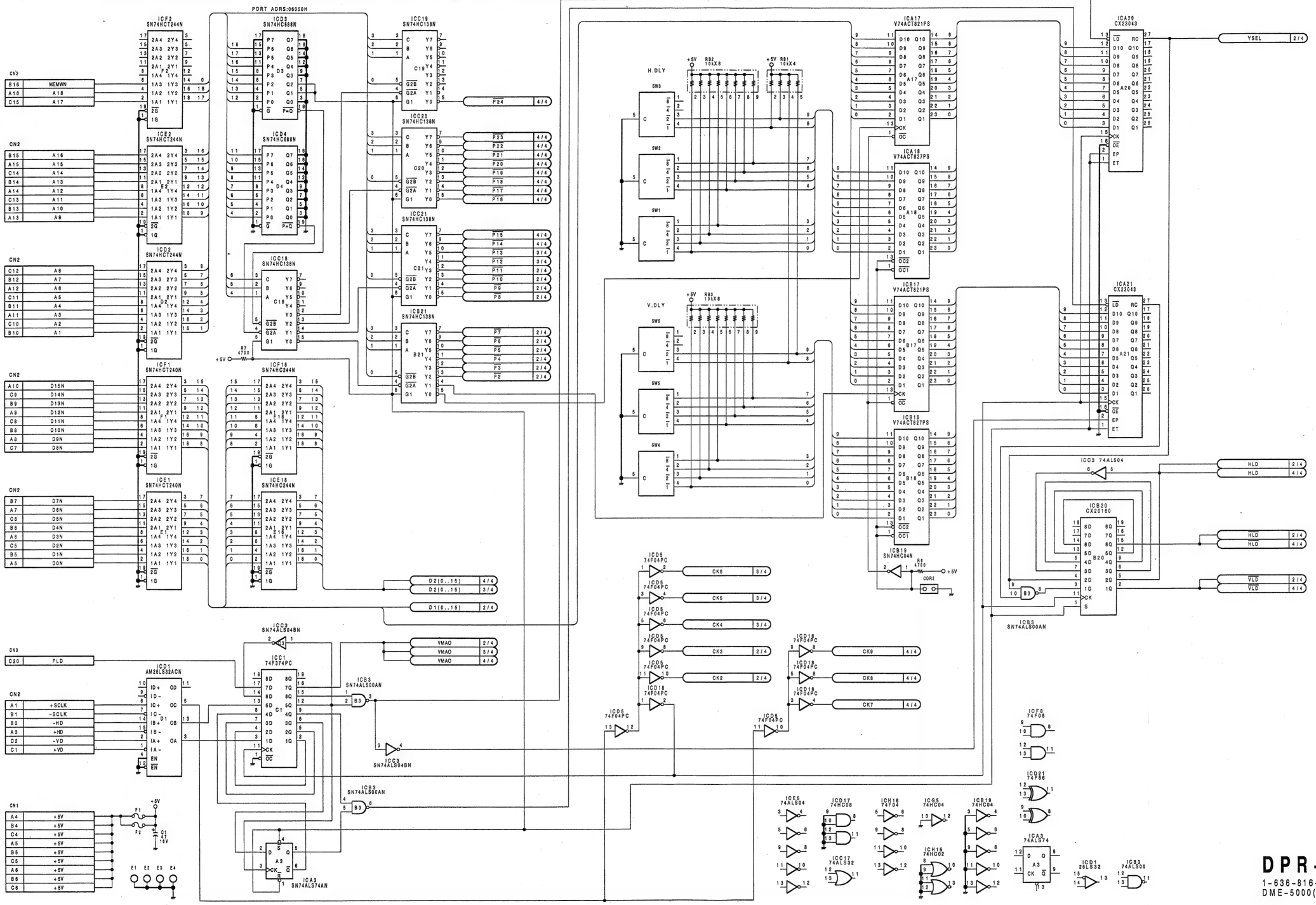

DPR-18(1/4)
1-636-816-11
DME-5000(J,UC)

8-201 8-202

A | B | C | D | E | F | G | H

DPR-18;READ ADDRESS GENERATOR AND SPLIT MIRROR GENERATOR

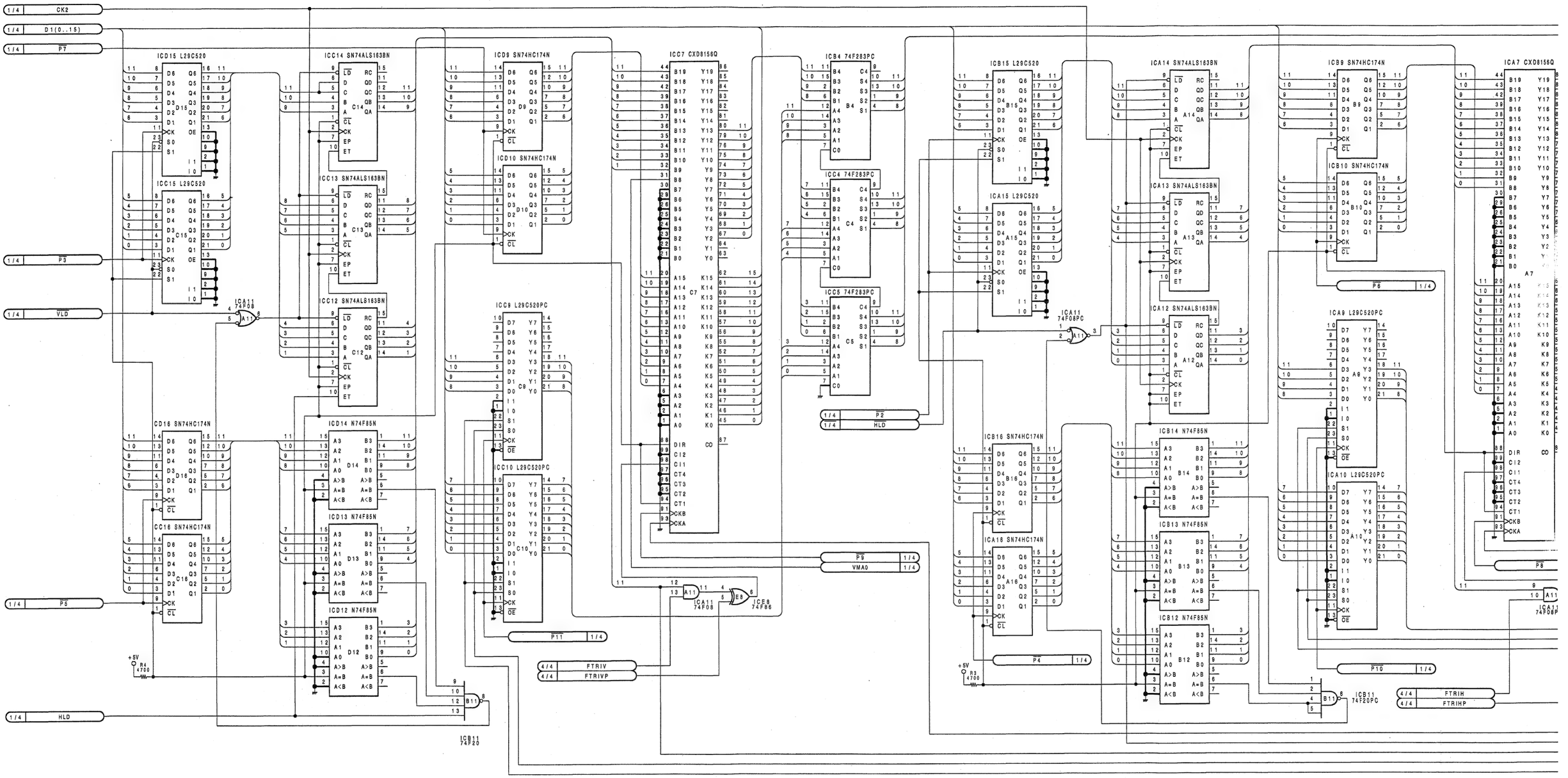

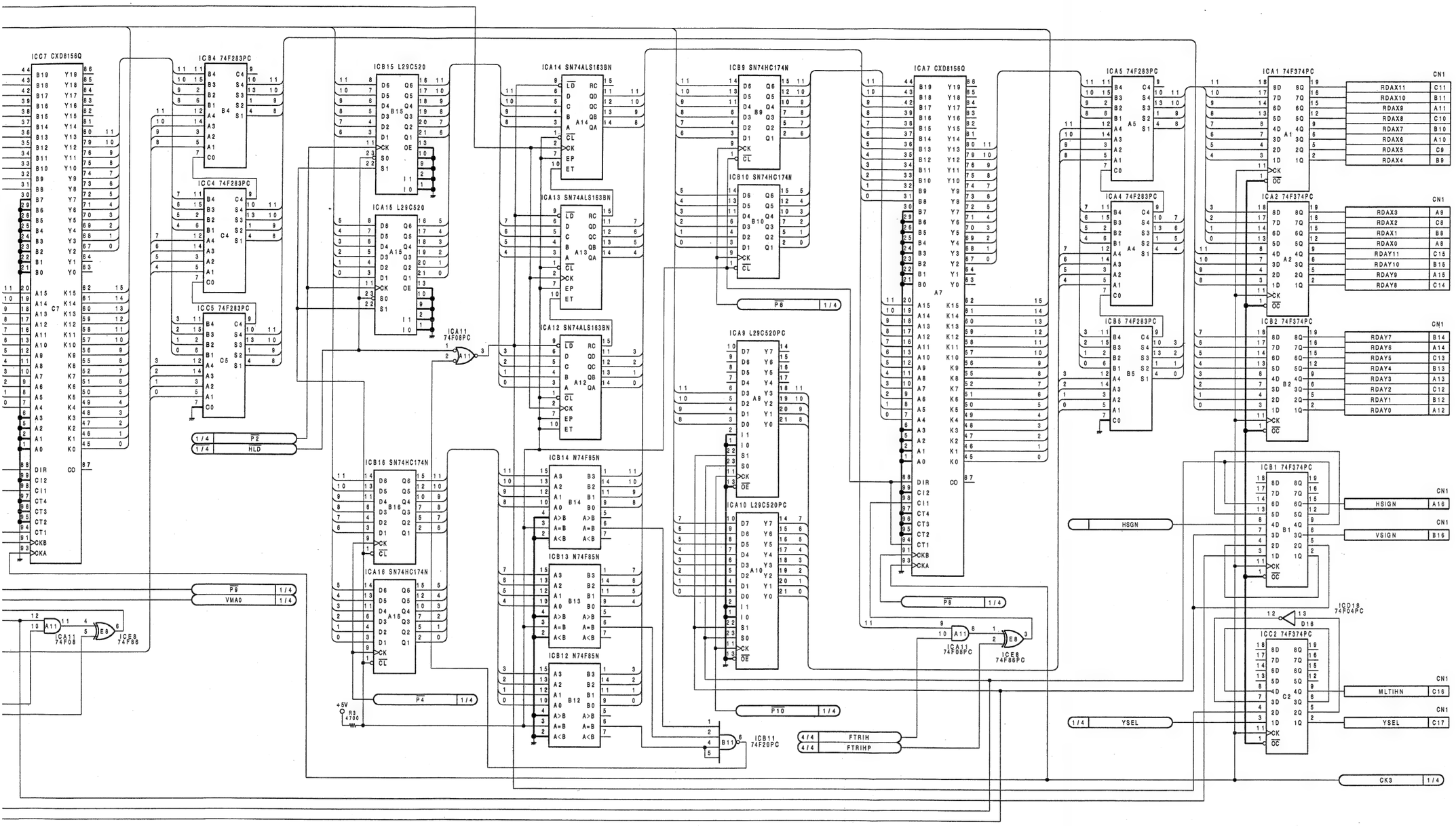

DPR-18(2/4)

1-636-816-11
DME-5000(J,UC)

DPR-18;READ ADDRESS GENERATOR AND SPLIT MIRROR GENERATOR

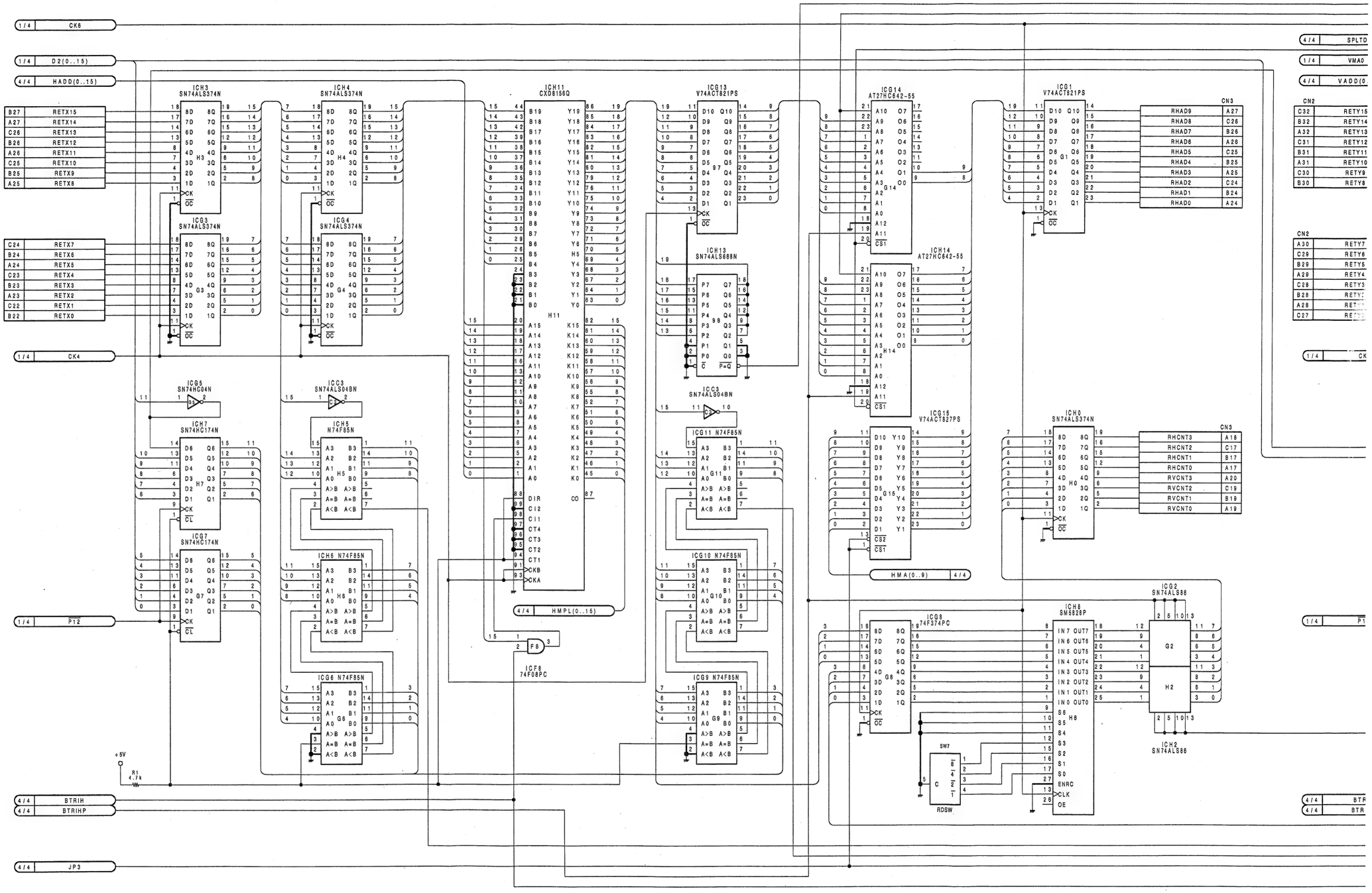

A | B | C | D | E | F | G | H

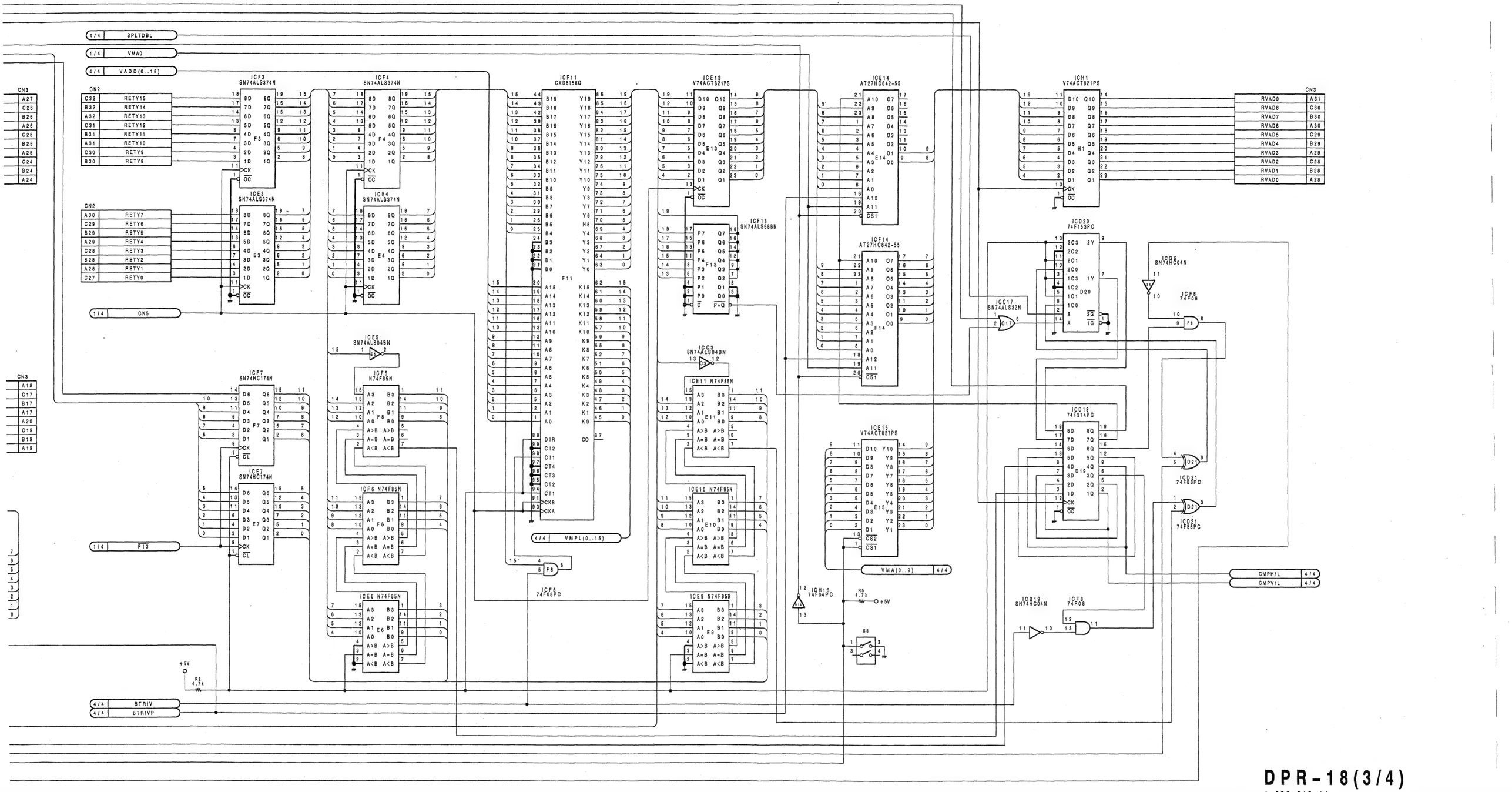

DPR-18(3/4)

1-636-816-11
DME-5000(J,UC)

DPR-18;READ ADDRESS GENERATOR AND SPLIT MIRROR GENERATOR

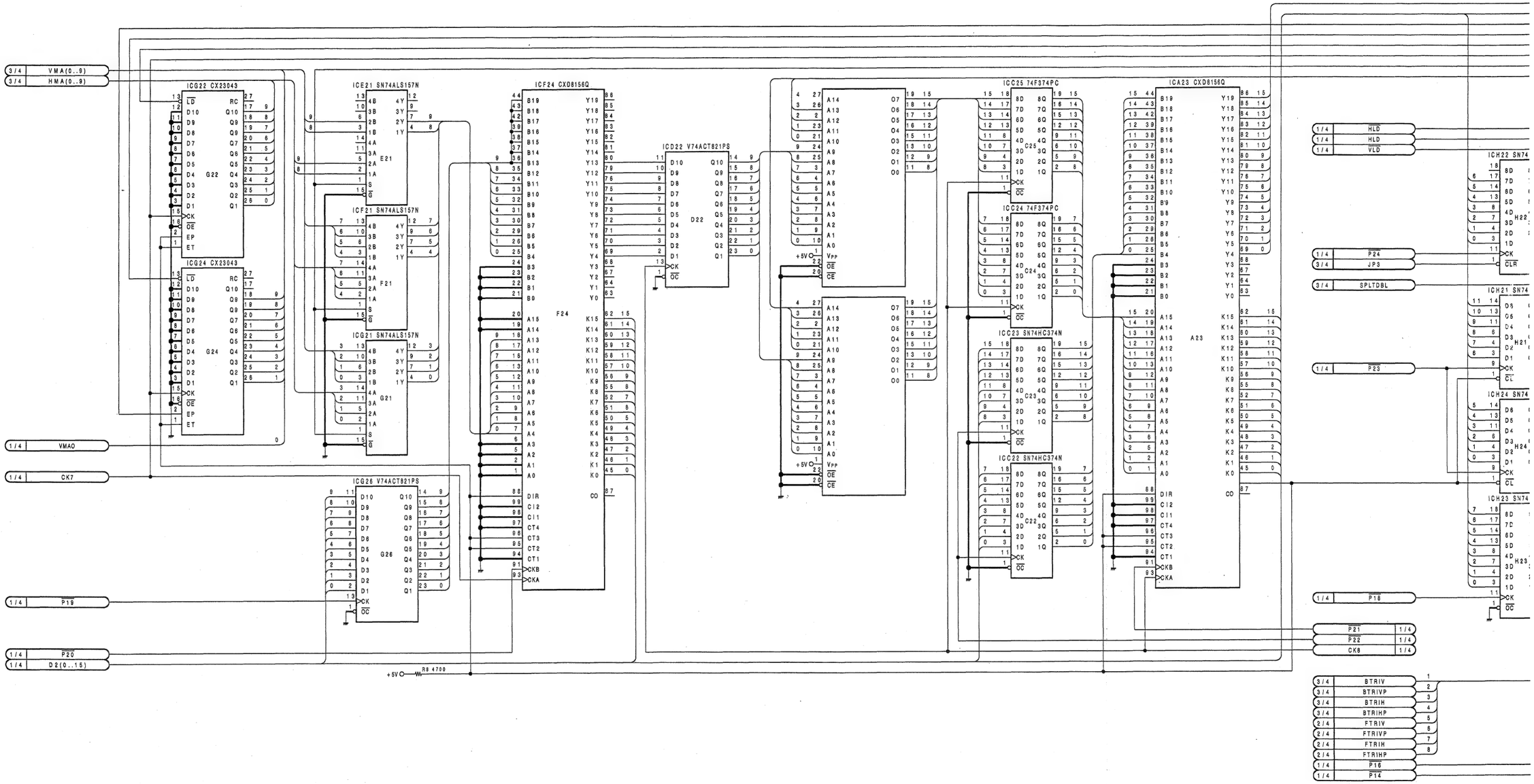

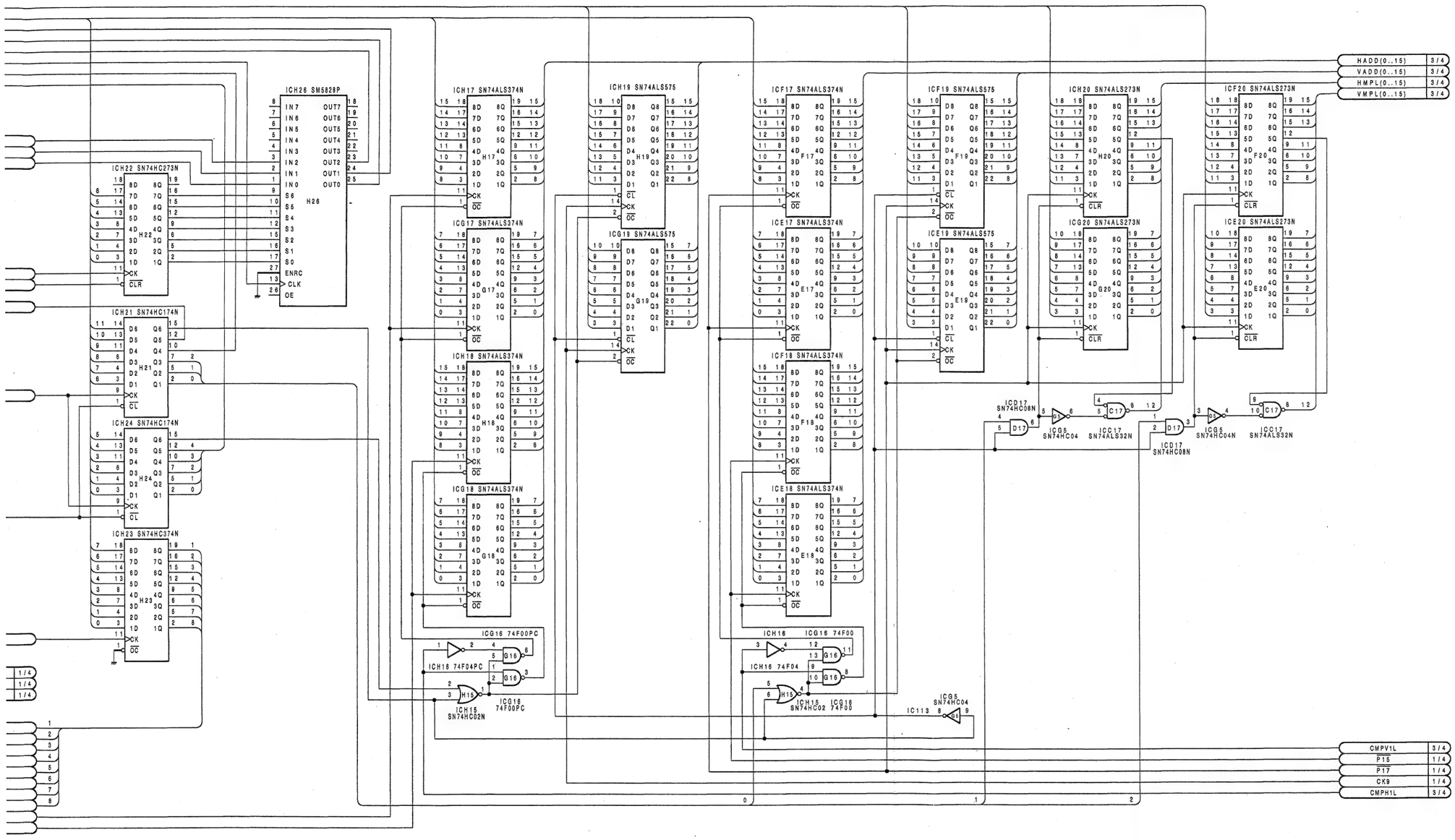

DPR-18(4/4)

1-636-816-11
DME-5000(J,UC)

MEM-41;3 FIELD VIDEO MEMORY AND INTERPOLATOR

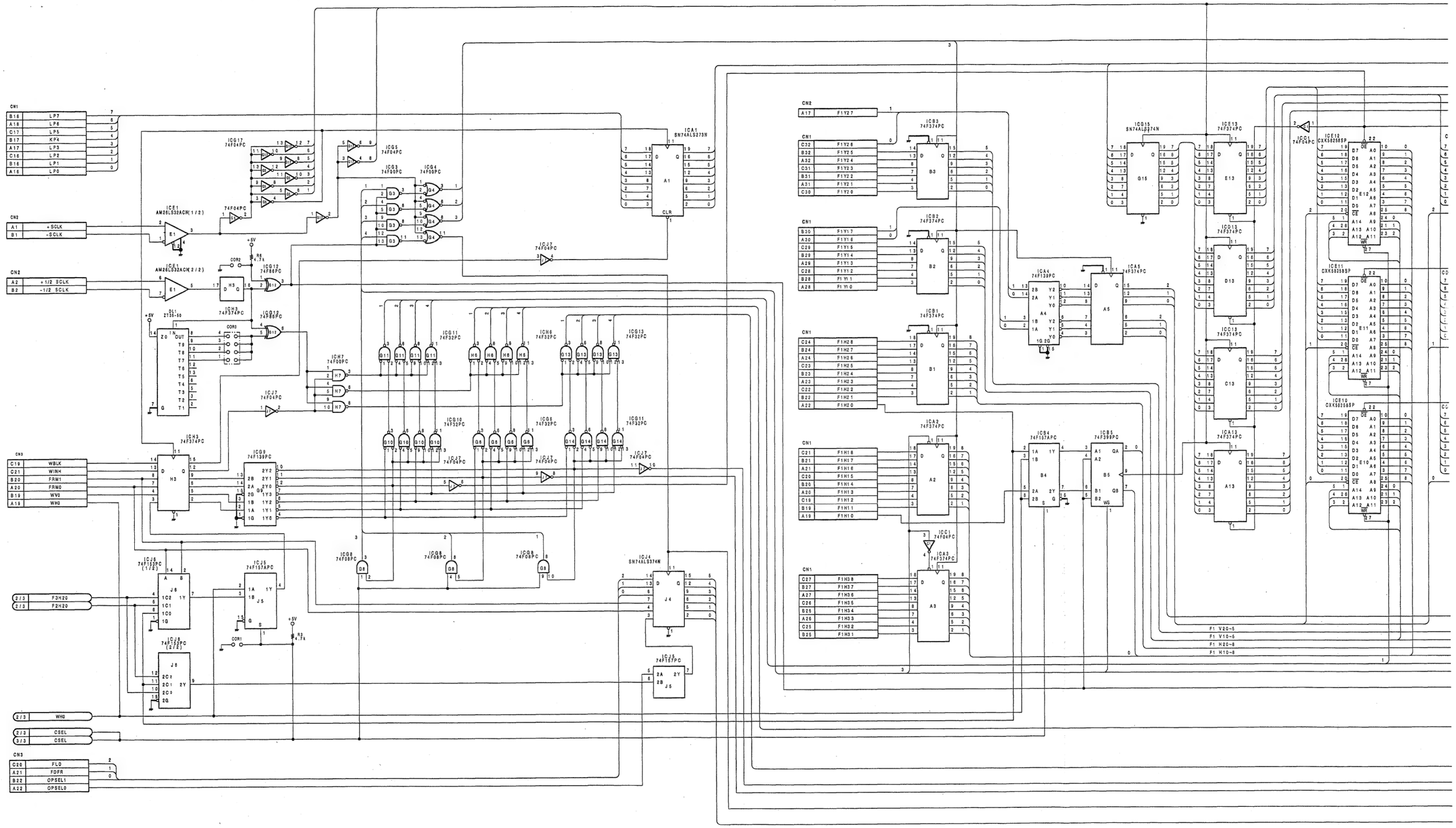

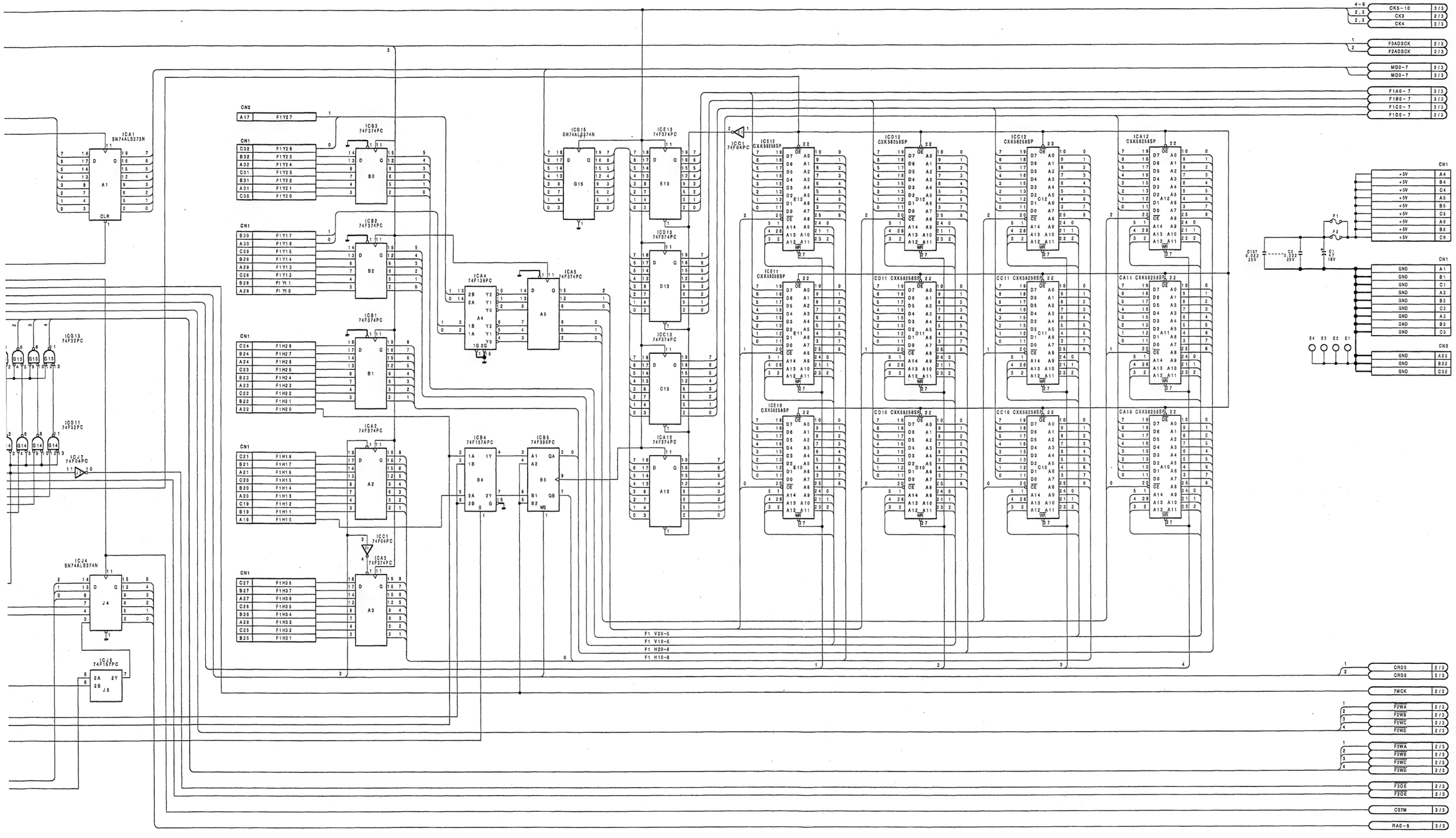

MEM-41(1/3)

1-636-820-11
DME-5000(J,UC)

MEM-41;3 FIELD VIDEO MEMORY AND INTERPOLATOR

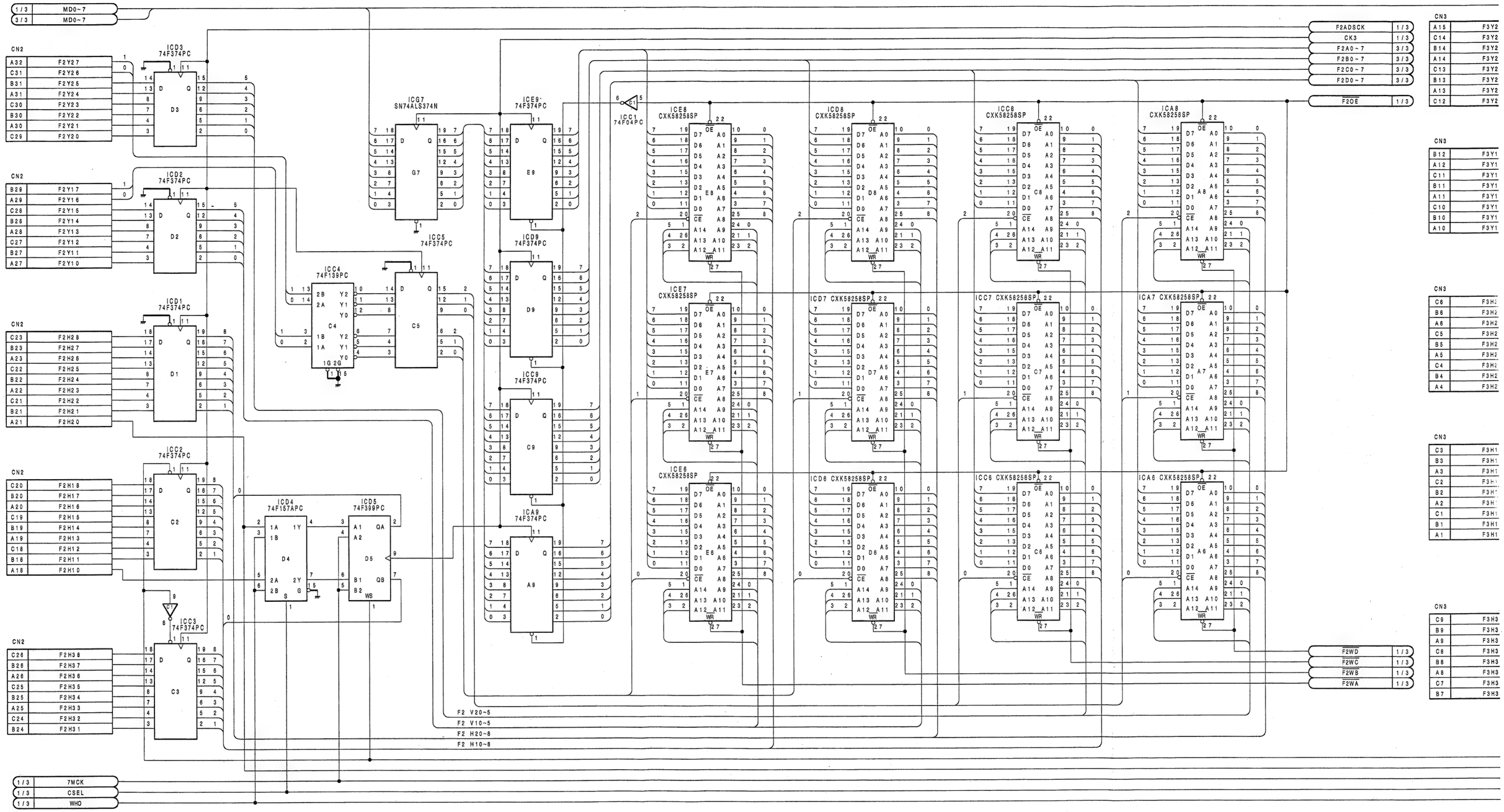

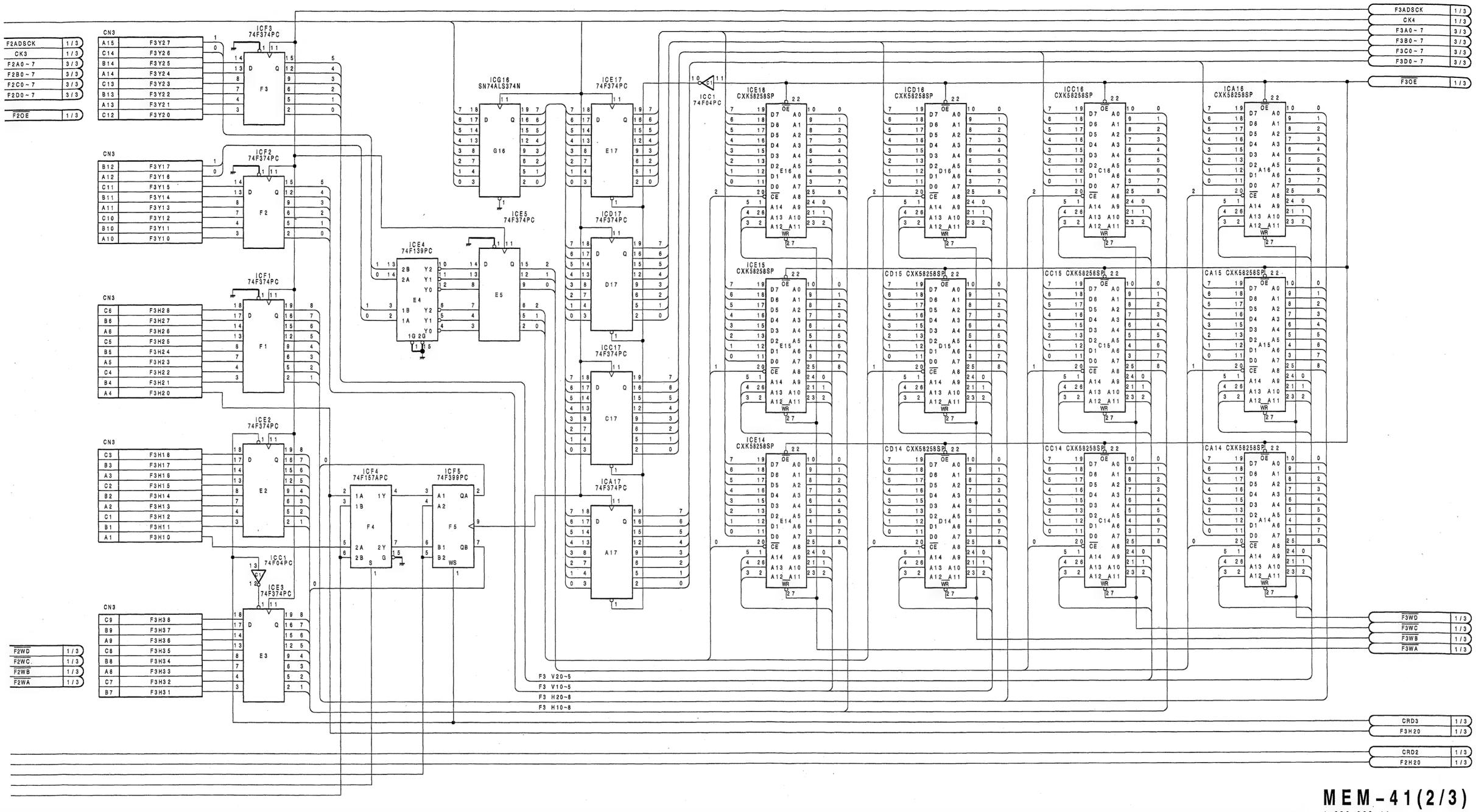

MEM-41(2/3)
1-636-820-11
DME-5000(J,UC)

MEM-41;3 FIELD VIDEO MEMORY AND INTERPOLATOR

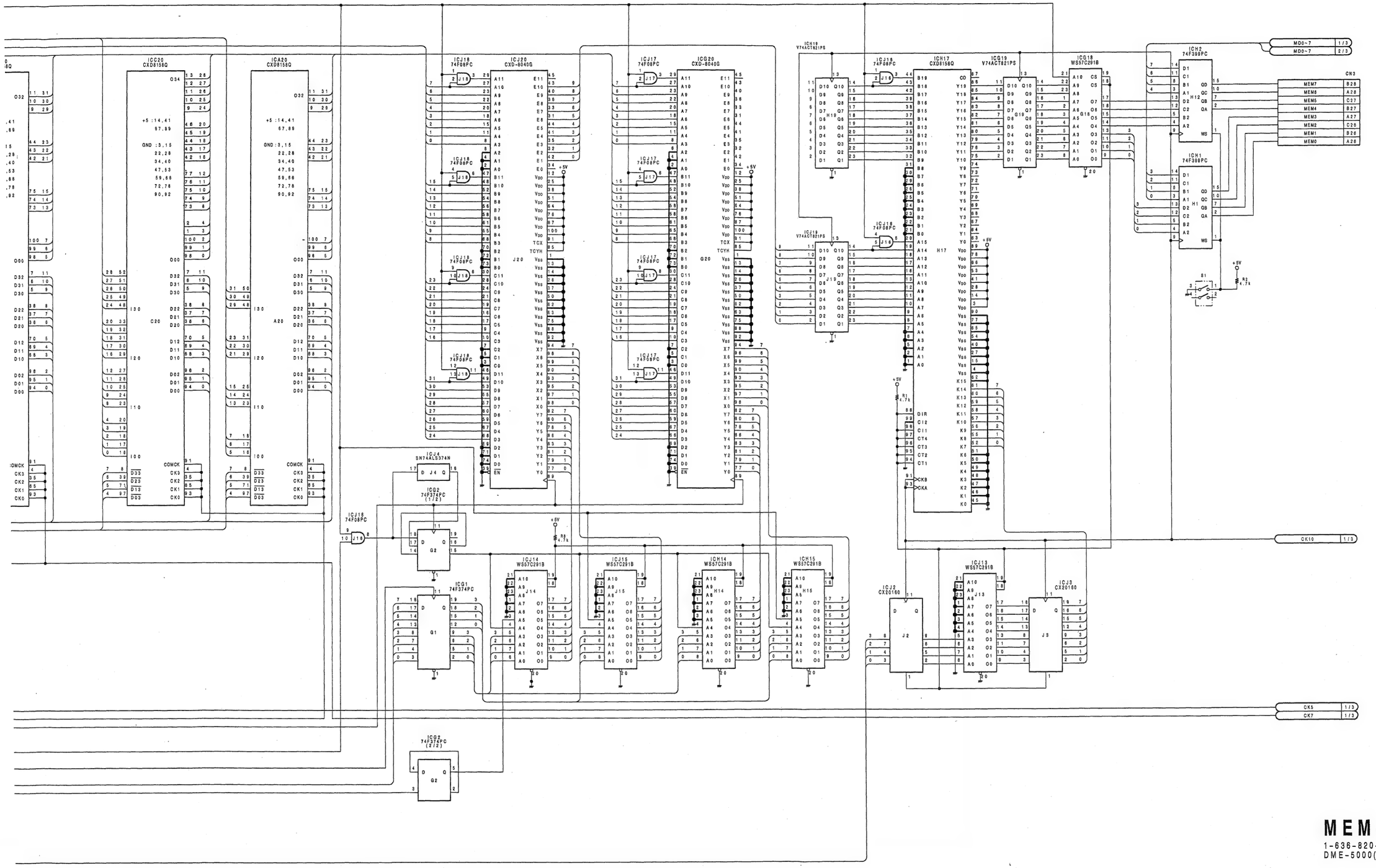

MEM-41(3/3)

1-636-820-11

DME-5000(J,UC)

CN-456;POWER SUPPLY CONNECTOR BOARD

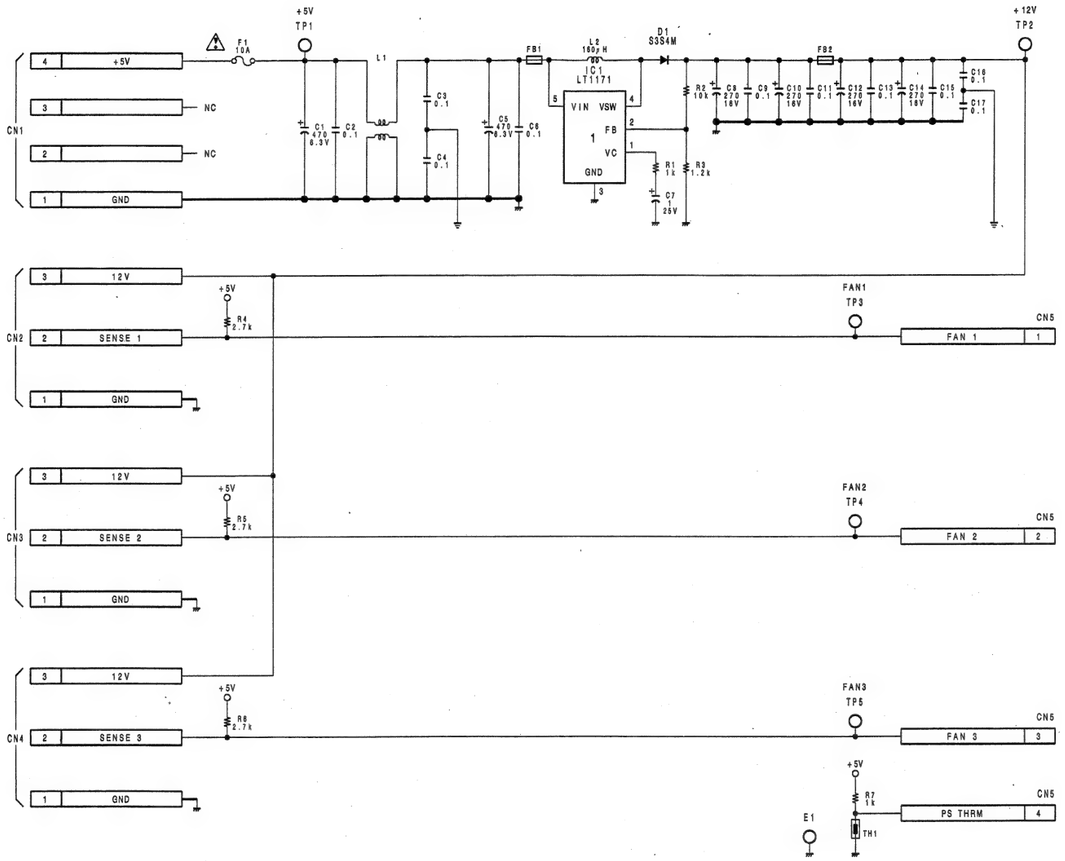

CN-456
1-636-522-11
DME-5000(J,UC)

CN-462;BNC CONNECTOR BOARD

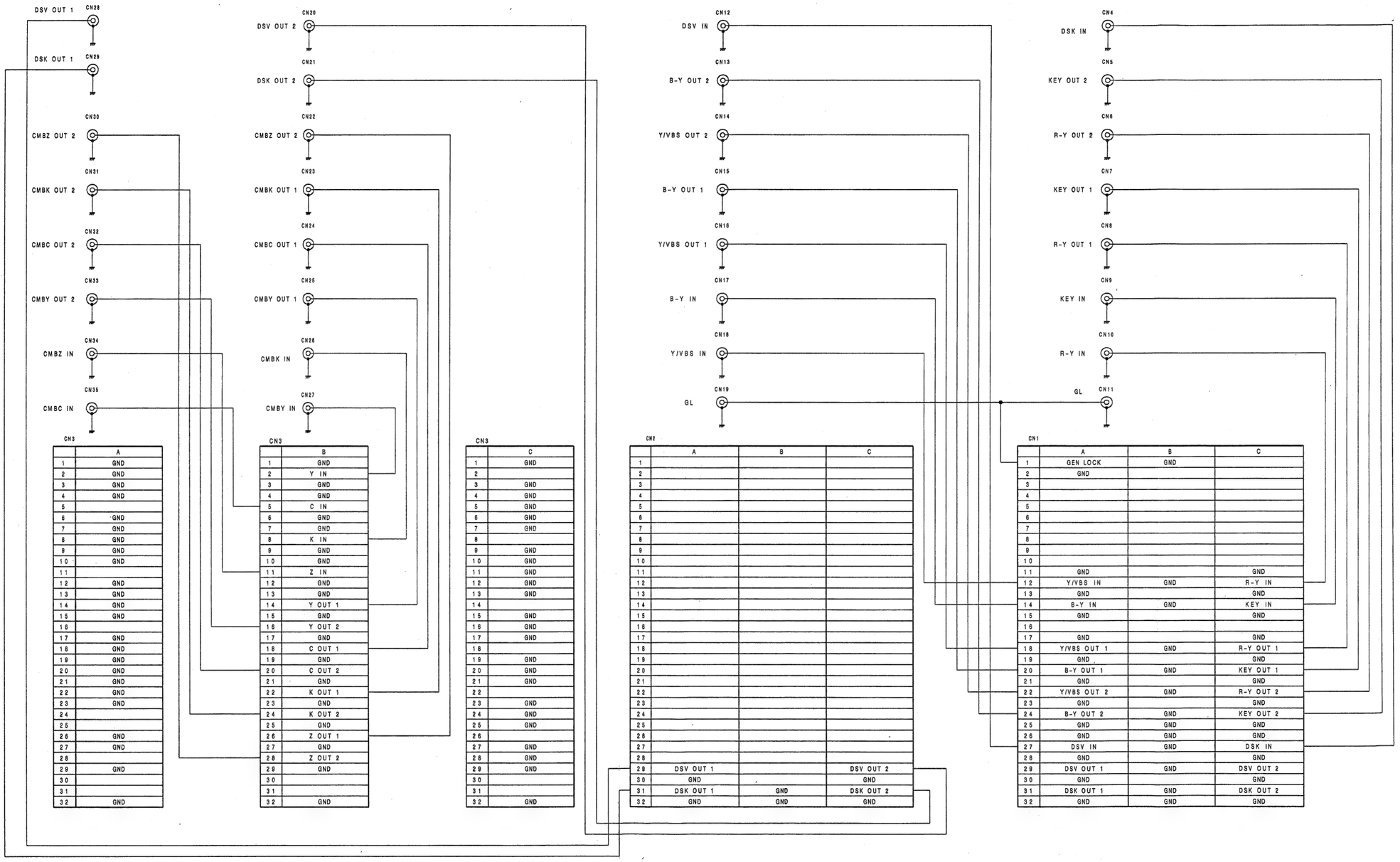

CN3

	A
1	GND
2	GND
3	GND
4	GND
5	
6	GND
7	GND
8	GND
9	GND
10	GND
11	
12	GND
13	GND
14	GND
15	GND
16	
17	GND
18	GND
19	GND
20	GND
21	GND
22	GND
23	GND
24	
25	
26	GND
27	GND
28	
29	GND
30	
31	
32	GND

CN3

	B
1	GND
2	Y IN
3	GND
4	GND
5	C IN
6	GND
7	GND
8	K IN
9	GND
10	GND
11	Z IN
12	GND
13	GND
14	Y OUT 1
15	GND
16	Y OUT 2
17	GND
18	C OUT 1
19	GND
20	C OUT 2
21	GND
22	K OUT 1
23	GND
24	K OUT 2
25	GND
26	Z OUT 1
27	GND
28	Z OUT 2
29	GND
30	
31	
32	GND

CN3

	C
1	GND
2	
3	GND
4	GND
5	GND
6	GND
7	GND
8	
9	GND
10	GND
11	GND
12	GND
13	GND
14	
15	GND
16	GND
17	GND
18	
19	GND
20	GND
21	GND
22	
23	GND
24	GND
25	GND
26	
27	GND
28	GND
29	GND
30	
31	
32	GND

CN2

	A	B	C
1			
2			
3			
4			
5			
6			
7			
8			
9			
10			
11			
12			
13			
14			
15			
16			
17			
18			
19			
20			
21			
22			
23			
24			
25			
26			
27			
28			
29	DSV OUT 1		DSV OUT 2
30	GND		GND
31	DSK OUT 1	GND	DSK OUT 2
32	GND	GND	GND

CN1

	A	B	C
1	GEN LOCK	GND	
2	GND		
3			
4			
5			
6			
7			
8			
9			
10			
11	GND		GND
12	Y/VBS IN	GND	R-Y IN
13	GND		GND
14	B-Y IN	GND	KEY IN
15	GND		GND
16			
17	GND		GND
18	Y/VBS OUT 1	GND	R-Y OUT 1
19	GND		GND
20	B-Y OUT 1	GND	KEY OUT 1
21	GND		GND
22	Y/VBS OUT 2	GND	R-Y OUT 2
23	GND		GND
24	B-Y OUT 2	GND	KEY OUT 2
25	GND	GND	GND
26	GND	GND	GND
27	DSV IN	GND	DSK IN
28	GND		GND
29	DSV OUT 1	GND	DSV OUT 2
30	GND		GND
31	DSK OUT 1	GND	DSK OUT 2
32	GND	GND	GND

CN-462
1-636-825-11
DME-5000(J,UC)

CN-463;D SUB CONNECTOR BOARD

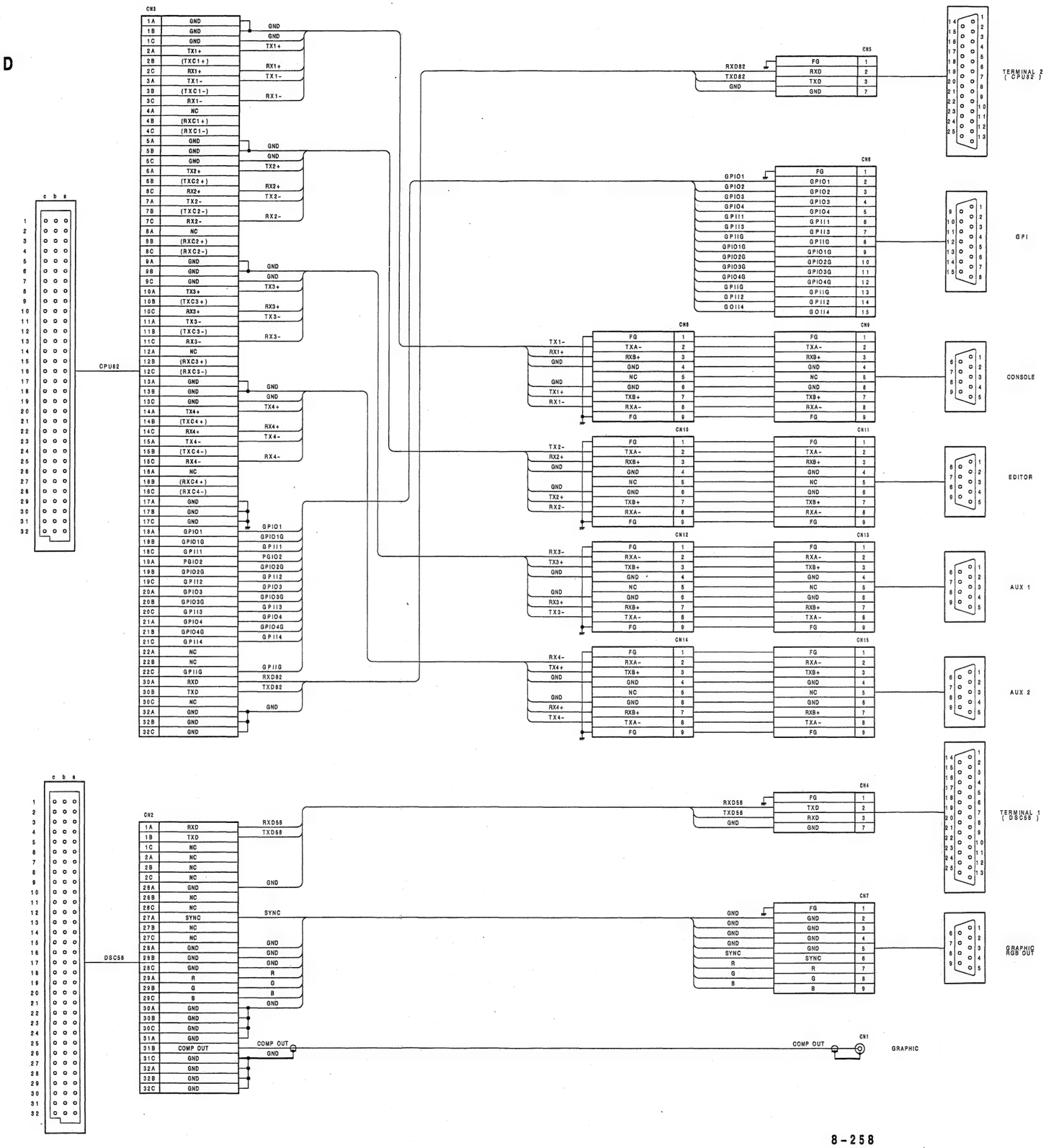

CN-463
1-636-826-11
DME-5000(J,UC)

MB-305;MOTHER BOARD

2/2 CONT

2/2 F1HV

2/2 CPU BUS

2/2 F2HV

2/2 LGHT

2/2 F3HV

2/2 RHVCNT

2/2 MEM CONT

2/2 HVLPC

2/2 WPBD

2/2 GRP

2/2 MOT

CN25

	A	B	C
1	GND	GND	GND
2	GND	GND	GND
3	GND	GND	GND
4	+5V	+5V	+5V
5	+5V	+5V	+5V
6	+5V	+5V	+5V
7	CONT0	CONT1	CONT2
8			
9			
10			
11			
12			
13			
14			
15			
16	LPK0	LPK1	LPK2
17	LPK3	LPK4	LPK5
18	LPK6	LPK7	
19	F1H10	F1H11	F1H12
20	F1H13	F1H14	F1H15
21	F1H16	F1H17	F1H18
22	F1H20	F1H21	F1H22
23	F1H23	F1H24	F1H25
24	F1H26	F1H27	F1H28
25	F1H30	F1H31	F1H32
26	F1H33	F1H34	F1H35
27	F1H36	F1H37	F1H38
28	F1V10	F1V11	F1V12
29	F1V13	F1V14	F1V15
30	F1V16	F1V17	F1V20
31	F1V21	F1V22	F1V23
32	F1V24	F1V25	F1V26

CN22

	A	B	C
1	GND	GND	GND
2	GND	GND	GND
3	GND	GND	GND
4	+5V	+5V	+5V
5	+5V	+5V	+5V
6	+5V	+5V	+5V
7	CONT0	CONT1	CONT2
8			
9			
10			
11			
12			
13			
14			
15			
16	LPC0	LPC1	LPC2
17	LPC3	LPC4	LPC5
18	LPC6	LPC7	
19	F1H10	F1H11	F1H12
20	F1H13	F1H14	F1H15
21	F1H16	F1H17	F1H18
22	F1H20	F1H21	F1H22
23	F1H23	F1H24	F1H25
24	F1H26	F1H27	F1H28
25	F1H30	F1H31	F1H32
26	F1H33	F1H34	F1H35
27	F1H36	F1H37	F1H38
28	F1V10	F1V11	F1V12
29	F1V13	F1V14	F1V15
30	F1V16	F1V17	F1V20
31	F1V21	F1V22	F1V23
32	F1V24	F1V25	F1V26

CN19

	A	B	C
1	GND	GND	GND
2	GND	GND	GND
3	GND	GND	GND
4	+5V	+5V	+5V
5	+5V	+5V	+5V
6	+5V	+5V	+5V
7	CONT0	CONT1	CONT2
8			
9			
10			
11			
12			
13			
14			
15			
16	LPY0	LPY1	LPY2
17	LPY3	LPY4	LPY5
18	LPY6	LPY7	
19	F1H10	F1H11	F1H12
20	F1H13	F1H14	F1H15
21	F1H16	F1H17	F1H18
22	F1H20	F1H21	F1H22
23	F1H23	F1H24	F1H25
24	F1H26	F1H27	F1H28
25	F1H30	F1H31	F1H32
26	F1H33	F1H34	F1H35
27	F1H36	F1H37	F1H38
28	F1V10	F1V11	F1V12
29	F1V13	F1V14	F1V15
30	F1V16	F1V17	F1V20
31	F1V21	F1V22	F1V23
32	F1V24	F1V25	F1V26

CN16

	A	B	C
1	GND	GND	GND
2	GND	GND	GND
3	GND	GND	GND
4	+5V	+5V	+5V
5	+5V	+5V	+5V
6	+5V	+5V	+5V
7			
8	HLPC0	HLPC1	HLPC2
9	HLPC3	HLPC4	HLPC5
10	HLPC6	HLPC7	HLPC8
11	VLPC0	VLPC1	VLPC2
12	VLPC3	VLPC4	
13	VLPC6	VLPC7	VLPC8
14	VDFC0	VDFC1	VDFC2
15	VDFC3	VDFC4	CSEL
16	VDFC6	VDFC7	VDFC8
17	LPY0	LPY1	LPY2
18	LPY3	LPY4	LPY5
19	LPY6	LPY7	
20	LPC0	LPC1	LPC2
21	LPC3	LPC4	LPC5
22	LPC6	LPC7	
23	LPK0	LPK1	LPK2
24	LPK3	LPK4	LPK5
25	LPK6	LPK7	
26			
27			
28			
29			
30	(+12V)	(+12V)	(+12V)
31	(AGND)	(AGND)	(AGND)
32	(-12V)	(-12V)	(-12V)

CN13

	A	B	C
1	GND	GND	GND
2	GND	GND	GND
3	GND	GND	GND
4	+5V	+5V	+5V
5	+5V	+5V	+5V
6	+5V	+5V	+5V
7	DPR0	DPR1	DPR2
8	DIFY0	DIFY1	DIFY2
9	DIFY3	DIFY4	DIFY5
10	DIFY6	DIFY7	DIFC0
11	DIFC1	DIFC2	DIFC3
12	DIFC4	DIFC5	DIFC6
13	DIFC7	DIFK0	DIFK1
14	DIFK2	DIFK3	DIFK4
15	DIFK5	DIFK6	DIFK7
16			
17			
18			
19			
20			
21			
22			
23			
24	WPK0	WPK1	WPK2
25	WPK3	WPK4	WPK5
26	WPK6	WPK7	
27	BOD0	BOD1	BOD2
28	BOD3	BOD4	BOD5
29	BOD6	BOD7	
30	INKY0	INKY1	INKY2
31	INKY3	INKY4	INKY5
32	INKY6	INKY7	

CN26

	A	B	C
1	+SCLK	-SCLK	+VD
2	+1/2SCLK	-1/2SCLK	-VD
3	+HD	-HD	1/4SCLK
4	RESETN	BUSSP	SYNC
5	D_0N	D_1N	D_2N
6	D_3N	D_4N	D_5N
7	D_6N	D_7N	D_8N
8	D_9N	$D_{10}N$	$D_{11}N$
9	$D_{12}N$	$D_{13}N$	$D_{14}N$
10	$D_{15}N$	A1	A2
11	A3	A4	A5
12	A6	A7	A8
13	A9	A10	A11
14	A12	A13	A14
15	A15	A16	A17
16	A18	MEMWN	MEMRN
17	F1V27	F1SP1	F1SP2
18	F2H10	F2H11	F2H12
19	F2H13	F2H14	F2H15
20	F2H16	F2H17	F2H18
21	F2H20	F2H21	F2H22
22	F2H23	F2H24	F2H25
23	F2H26	F2H27	F2H28
24	F2H30	F2H31	F2H32
25	F2H33	F2H34	F2H35
26	F2H36	F2H37	F2H38
27	F2V10	F2V11	F2V12
28	F2V13	F2V14	F2V15
29	F2V16	F2V17	F2V20
30	F2V21	F2V22	F2V23
31	F2V24	F2V25	F2V26
32	F2V27	F2SP1	F2SP2

CN23

	A	B	C
1	+SCLK	-SCLK	+VD
2	+1/2SCLK	-1/2SCLK	-VD
3	+HD	-HD	1/4SCLK
4	RESETN	BUSSP	SYNC
5	D_0N	D_1N	D_2N
6	D_3N	D_4N	D_5N
7	D_6N	D_7N	D_8N
8	D_9N	$D_{10}N$	$D_{11}N$
9	$D_{12}N$	$D_{13}N$	$D_{14}N$
10	$D_{15}N$	A1	A2
11	A3	A4	A5
12	A6	A7	A8
13	A9	A10	A11
14	A12	A13	A14
15	A15	A16	A17
16	A18	MEMWN	MEMRN
17	F1V27	F1SP1	F1SP2
18	F2H10	F2H11	F2H12
19	F2H13	F2H14	F2H15
20	F2H16	F2H17	F2H18
21	F2H20	F2H21	F2H22
22	F2H23	F2H24	F2H25
23	F2H26	F2H27	F2H28
24	F2H30	F2H31	F2H32
25	F2H33	F2H34	F2H35
26	F2H36	F2H37	F2H38
27	F2V10	F2V11	F2V12
28	F2V13	F2V14	F2V15
29	F2V16	F2V17	F2V20
30	F2V21	F2V22	F2V23
31	F2V24	F2V25	F2V26
32	F2V27	F2SP1	F2SP2

CN20

	A	B	C
1	+SCLK	-SCLK	+VD
2	+1/2SCLK	-1/2SCLK	-VD
3	+HD	-HD	1/4SCLK
4	RESETN	BUSSP	SYNC
5	D_0N	D_1N	D_2N
6	D_3N	D_4N	D_5N
7	D_6N	D_7N	D_8N
8	D_9N	$D_{10}N$	$D_{11}N$
9	$D_{12}N$	$D_{13}N$	$D_{14}N$
10	$D_{15}N$	A1	A2
11	A3	A4	A5
12	A6	A7	A8
13	A9	A10	A11
14	A12	A13	A14
15	A15	A16	A17
16	A18	MEMWN	MEMRN
17	F1V27	F1SP1	F1SP2
18	F2H10	F2H11	F2H12
19	F2H13	F2H14	F2H15
20	F2H16	F2H17	F2H18
21	F2H20	F2H21	F2H22
22	F2H23	F2H24	F2H25
23	F2H26	F2H27	F2H28
24	F2H30	F2H31	F2H32
25	F2H33	F2H34	F2H35
26	F2H36	F2H37	F2H38
27	F2V10	F2V11	F2V12
28	F2V13	F2V14	F2V15
29	F2V16	F2V17	F2V20
30	F2V21	F2V22	F2V23
31	F2V24	F2V25	F2V26
32	F2V27	F2SP1	F2SP2

CN17

	A	B	C
1	+SCLK	-SCLK	+VD
2	+1/2SCLK	-1/2SCLK	-VD
3	+HD	-HD	1/4SCLK
4	RESETN	BUSSP	SYNC
5	D_0N	D_1N	D_2N
6	D_3N	D_4N	D_5N
7	D_6N	D_7N	D_8N
8	D_9N	$D_{10}N$	$D_{11}N$
9	$D_{12}N$	$D_{13}N$	$D_{14}N$
10	$D_{15}N$	A1	A2
11	A3	A4	A5
12	A6	A7	A8
13	A9	A10	A11
14	A12	A13	A14
15	A15	A16	A17
16	A18	MEMWN	MEMRN
17			
18			
19			
20			
21			
22			
23			
24			
25			
26			
27			
28			
29			
30			
31			
32			

CN14

	A	B	C
1	+SCLK	-SCLK	+VD
2	+1/2SCLK	-1/2SCLK	-VD
3	+HD	-HD	1/4SCLK
4	RESETN	BUSSP	SYNC
5	D_0N	D_1N	D_2N
6	D_3N	D_4N	D_5N
7	D_6N	D_7N	D_8N
8	D_9N	$D_{10}N$	$D_{11}N$
9	$D_{12}N$	$D_{13}N$	$D_{14}N$
10	$D_{15}N$	A1	A2
11	A3	A4	A5
12	A6	A7	A8
13	A9	A10	A11
14	A12	A13	A14
15	A15	A16	A17
16	A18	MEMWN	MEMRN
17	LGHT0	LGHT1	LGHT2
18	LGHT3	LGHT4	LGHT5
19	LGHT6	LGHT7	LGHT8
20	LGHT9	LGHT10	LGHT11
21			
22			
23			
24			
25			
26			
27			
28			
29			
30			
31			
32			

CN27

	A	B	C
1	F3H10	F3H11	F3H12
2	F3H13	F3H14	F3H15
3	F3H16	F3H17	F3H18
4	F3H20	F3H21	F3H22
5	F3H23	F3H24	F3H25
6	F3H26	F3H27	F3H28
7	F3H30	F3H31	F3H32
8	F3H33	F3H34	F3H35
9	F3H36	F3H37	F3H38
10	F3V10	F3V11	F3V12
11	F3V13	F3V14	F3V15
12	F3V16	F3V17	F3V20
13	F3V21	F3V22	F3V23
14	F3V24	F3V25	F3V26
15	F3V27	F3SP1	F3SP2
16	RHCNT0	RHCNT1	RHCNT2
17	RHCNT3	RVCNT0	RVCNT1
18	RVCNT2	RVCNT3	RVSP
19	WH0	NV0	WBLK
20	FRM0	FRM1	FLD
21	FDFR	7MDFR	WINH
22	OPSEL0	OPSEL1	MTM0
23	MTM1	MTM2	MTM3
24			
25			
26	MEMK0	MEMK1	MEMK2
27	MEMK3	MEMK4	MEMK5
28	MEMK6	MEMK7	
29			
30			
31			
32	GND	GND	GND

CN24

	A	B	C
1	F3H10	F3H11	F3H12
2	F3H13	F3H14	F3H15
3	F3H16	F3H17	F3H18
4	F3H20	F3H21	F3H22
5	F3H23	F3H24	F3H25
6	F3H26	F3H27	F3H28
7	F3H30	F3H31	F3H32
8	F3H33	F3H34	F3H35
9	F3H36	F3H37	F3H38
10	F3V10	F3V11	F3V12
11	F3V13	F3V14	F3V15
12	F3V16	F3V17	F3V20
13	F3V21	F3V22	F3V23
14	F3V24	F3V25	F3V26
15	F3V27	F3SP1	F3SP2
16	RHCNT0	RHCNT1	RHCNT2
17	RHCNT3	RVCNT0	RVCNT1
18	RVCNT2	RVCNT3	RVSP
19	WH0	NV0	WBLK
20	FRM0	FRM1	FLD
21	FDFR	7MDFR	WINH
22	OPSEL0	OPSEL1	MTM0
23	MTM1	MTM2	MTM3
24			
25			
26	MEMC0	MEMC1	MEMC2
27	MEMC3	MEMC4	MEMC5
28	MEMC6	MEMC7	
29			
30			
31			
32	GND	GND	GND

CN21

	A	B	C
1	F3H10	F3H11	F3H12
2	F3H13	F3H14	F3H15
3	F3H16	F3H17	F3H18
4	F3H20	F3H21	F3H22
5	F3H23	F3H24	F3H25
6	F3H26	F3H27	F3H28
7	F3H30	F3H31	F3H32
8	F3H33	F3H34	F3H35
9	F3H36	F3H37	F3H38
10	F3V10	F3V11	F3V12
11	F3V13	F3V14	F3V15
12	F3V16	F3V17	F3V20
13	F3V21	F3V22	F3V23
14	F3V24	F3V25	F3V26
15	F3V27	F3SP1	F3SP2
16	RHCNT0	RHCNT1	RHCNT2
17	RHCNT3	RVCNT0	RVCNT1
18	RVCNT2	RVCNT3	RVSP
19	WH0	NV0	WBLK
20	FRM0	FRM1	FLD
21	FDFR	7MDFR	WINH
22	OPSEL0	OPSEL1	MTM0
23	MTM1	MTM2	MTM3
24			
25			
26	MEMY0	MEMY1	MEMY2
27	MEMY3	MEMY4	MEMY5
28	MEMY6	MEMY7	
29			
30			
31			
32	GND	GND	GND

CN18

	A	B	C
1	BDY0	BDY1	BDY2
2	BDY3	BDY4	BDY5
3	BDY6	BDY7	
4	BDC0	BDC1	BDC2
5	BDC3	BDC4	BDC5
6	BDC6	BDC7	
7	BDK0	BDK1	BDK2
8	BDK3	BDK4	BDK5
9	BDK6	BDK7	
10			
11			
12			
13			
14			
15			
16			
17			
18			
19			
20			
21			
22			
23			
24			
25			
26			
27			
28			
29			
30			
31			
32	GND	GND	GND

CN15

	A	B	C
1	BDY0	BDY1	BDY2
2	BDY3	BDY4	BDY5
3	BDY6	BDY7	
4	BDC0	BDC1	BDC2
5	BDC3	BDC4	BDC5
6	BDC6	BDC7	
7	BDK0	BDK1	BDK2
8	BDK3	BDK4	BDK5
9	BDK6	BDK7	
10			
11			
12			
13			
14			
15			
16			
17	MOT0	MOT1	MOT2
18	MOT3		
19			
20			
21			
22			
23			
24			
25			
26			
27			
28			
29			
30			
31			
32	GND	GND	GND

CN13

B	C
GND	GND
GND	GND
GND	GND
+5V	+5V
+5V	+5V
+5V	+5V
DPR1	DPR2
DIFY1	DIFY2
DIFY4	DIFY5
DIFY7	DIFC0
DIFC2	DIFC3
DIFC5	DIFC6
DIFK0	DIFK1
DIFK3	DIFK4
DIFK6	DIFK7
WPK1	WPK2
WPK4	WPK5
WPK7	
BOD1	BOD2
BOD4	BOD5
BOD7	
INKY1	INKY2
INKY4	INKY5
INKY7	

2/2 GRP

CN10

	A	B	C
1	GND	GND	GND
2	GND	GND	GND
3	GND	GND	GND
4	+5V	+5V	+5V
5	+5V	+5V	+5V
6	+5V	+5V	+5V
7	DPR0	DPR1	DPR2
8	CMBY0	CMBY1	CMBY2
9	CMBY3	CMBY4	CMBY5
10	CMBY6	CMBY7	
11	CMBC0	CMBC1	CMBC2
12	CMBC3	CMBC4	CMBC5
13	CMBC6	CMBC7	
14	CMBK0	CMBK1	CMBK2
15	CMBK3	CMBK4	CMBK5
16	CMBK6	CMBK7	
17	GRPY0	GRPY1	GRPY2
18	GRPY3	GRPY4	GRPY5
19	GRPY6	GRPY7	
20	GRPC0	GRPC1	GRPC2
21	GRPC3	GRPC4	GRPC5
22	GRPC6	GRPC7	
23	GRPK0	GRPK1	GRPK2
24	GRPK3	GRPK4	GRPK5
25	GRPK6	GRPK7	
26			WPSEL
27	BOD0	BOD1	BOD2
28	BOD3	BOD4	BOD5
29	BOD6	BOD7	
30	INKY0	INKY1	INKY2
31	INKY3	INKY4	INKY5
32	INKY6	INKY7	

CN7

	A	B	C
1	GND	GND	GND
2	GND	GND	GND
3	GND	GND	GND
4	+5V	+5V	+5V
5	+5V	+5V	+5V
6	+5V	+5V	+5V
7	(-5V)	(-5V)	(-5V)
8	CMBY0	CMBY1	CMBY2
9	CMBY3	CMBY4	CMBY5
10	CMBY6	CMBY7	
11	CMBC0	CMBC1	CMBC2
12	CMBC3	CMBC4	CMBC5
13	CMBC6	CMBC7	
14	CMBK0	CMBK1	CMBK2
15	CMBK3	CMBK4	CMBK5
16	CMBK6	CMBK7	
17	GRPY0	GRPY1	GRPY2
18	GRPY3	GRPY4	GRPY5
19	GRPY6	GRPY7	
20	GRPC0	GRPC1	GRPC2
21	GRPC3	GRPC4	GRPC5
22	GRPC6	GRPC7	
23	GRPK0	GRPK1	GRPK2
24	GRPK3	GRPK4	GRPK5
25	GRPK6	GRPK7	
26			
27			
28			
29			
30			
31			
32			

CN4

	A	B	C
1	GND	GND	GND
2	GND	GND	GND
3	GND	GND	GND
4	+5V	+5V	+5V
5	+5V	+5V	+5V
6	+5V	+5V	+5V
7	(-5V)	(-5V)	(-5V)
8	DIFY0	DIFY1	DIFY2
9	DIFY3	DIFY4	DIFY5
10	DIFY6	DIFY7	DIFC0
11	DIFC1	DIFC2	DIFC3
12	DIFC4	DIFC5	DIFC6
13	DIFC7	DIFK0	DIFK1
14	DIFK2	DIFK3	DIFK4
15	DIFK5	DIFK6	DIFK7
16	DAY0	DAY1	DAY2
17	DAY3	DAY4	DAY5
18	DAY6	DAY7	DAY8
19	DAY9	DAR-Y0	DAR-Y1
20	DAR-Y2	DAR-Y3	DAR-Y4
21	DAR-Y5	DAR-Y6	DAR-Y7
22	DAR-Y8	DAB-Y0	DAB-Y1
23	DAB-Y2	DAB-Y3	DAB-Y4
24	DAB-Y5	DAB-Y6	DAB-Y7
25	DAB-Y8	DAKEY0	DAKEY1
26	DAKEY2	DAKEY3	DAKEY4
27	DAKEY5	DAKEY6	DAKEY7
28	DAKEY8	DAKEY9	C
29	X	Y	Z
30	A	B	CLP
31	525/625	EXT.S	K.R.RST
32	W.CK	W.1/4CK	W.RST

CN1

	A	B	C
1	GND	GND	GND
2	GND	GND	GND
3	GND	GND	GND
4	+5V	+5V	+5V
5	+5V	+5V	+5V
6	+5V	+5V	+5V
7	(-5V)	(-5V)	(-5V)
8	(+12V)	(+12V)	(+12V)
9	(AGND)	(AGND)	(AGND)
10	(-12V)	(-12V)	(-12V)
11			
12			
13			
14			
15			
16	DAY0	DAY1	DAY2
17	DAY3	DAY4	DAY5
18	DAY6	DAY7	DAY8
19	DAY9	DAR-Y0	DAR-Y1
20	DAR-Y2	DAR-Y3	DAR-Y4
21	DAR-Y5	DAR-Y6	DAR-Y7
22	DAR-Y8	DAB-Y0	DAB-Y1
23	DAB-Y2	DAB-Y3	DAB-Y4
24	DAB-Y5	DAB-Y6	DAB-Y7
25	DAB-Y8	DAKEY0	DAKEY1
26	DAKEY2	DAKEY3	DAKEY4
27	DAKEY5	DAKEY6	DAKEY7
28	DAKEY8	DAKEY9	C
29	X	Y	Z
30	A	B	CLP
31	525/625	EXT.S	K.R.RST
32	W.CK	W.1/4CK	W.RST

CN55

+12V	1
GND	2
-12V	3

CN14

B	C
-SCLK	+VD
-1/2SCLK	-VD
-HD	1/4SCLK
BUSSP	SYNC
D1N	D2N
D4N	D5N
D7N	D8N
D10N	D11N
D13N	D14N
A1	A2
A4	A5
A7	A8
A10	A11
A13	A14
A16	A17
MEMWN	MEMRN
LGHT1	LGHT2
LGHT4	LGHT5
LGHT7	LGHT8
LGHT10	LGHT11

CN11

	A	B	C
1	+SCLK	-SCLK	+VD
2	+1/2SCLK	-1/2SCLK	-VD
3	+HD	-HD	1/4SCLK
4	RESETN	BUSSP	SYNC
5	D0N	D1N	D2N
6	D3N	D4N	D5N
7	D6N	D7N	D8N
8	D9N	D10N	D11N
9	D12N	D13N	D14N
10	D15N	A1	A2
11	A3	A4	A5
12	A6	A7	A8
13	A9	A10	A11
14	A12	A13	A14
15	A15	A16	A17
16	A18	MEMWN	MEMRN
17	RCMY0	RCMY1	RCMY2
18	RCMY3	RCMY4	RCMY5
19	RCMY6	RCMY7	RCMC0
20	RCMC1	RCMC2	RCMC3
21	RCMC4	RCMC5	RCMC6
22	RCMC7	RCMK0	RCMK1
23	RCMK2	RCMK3	RCMK4
24	RCMK5	RCMK6	RCMK7
25	MEMY0	MEMY1	MEMY2
26	MEMY3	MEMY4	MEMY5
27	MEMY6	MEMY7	MEMC0
28	MEMC1	MEMC2	MEMC3
29	MEMC4	MEMC5	MEMC6
30	MEMC7	MEMK0	MEMK1
31	MEMK2	MEMK3	MEMK4
32	MEMK5	MEMK6	MEMK7

2/2 3DRZ

CN8

	A	B	C
1	+SCLK	-SCLK	+VD
2	+1/2SCLK	-1/2SCLK	-VD
3	+HD	-HD	1/4SCLK
4	RESETN	BUSSP	SYNC
5	D0N	D1N	D2N
6	D3N	D4N	D5N
7	D6N	D7N	D8N
8	D9N	D10N	D11N
9	D12N	D13N	D14N
10	D15N	A1	A2
11	A3	A4	A5
12	A6	A7	A8
13	A9	A10	A11
14	A12	A13	A14
15	A15	A16	A17
16	A18	MEMWN	MEMRN
17	3DRZ0	3DRZ1	3DRZ2
18	3DRZ3	3DRZ4	3DRZ5
19	3DRZ6	3DRZ7	3DRZ8
20	3DRZ9	3DRZ10	3DRZ11
21	3DRZ12	3DRZ13	3DRZ14
22	3DRZ15		
23			
24	MEMY0	MEMY1	MEMY2
25	MEMY3	MEMY4	MEMY5
26	MEMY6	MEMY7	MEMC0
27	MEMC1	MEMC2	MEMC3
28	MEMC4	MEMC5	MEMC6
29	MEMC7	MEMK0	MEMK1
30	MEMK3	MEMK3	MEMK4
31	MEMK5	MEMK6	MEMK7
32	(+27M)	(-27M)	GND

CN5

	A	B	C
1	+SCLK	-SCLK	+VD
2	+1/2SCLK	-1/2SCLK	-VD
3	+HD	-HD	1/4SCLK
4	DIE	BLK	SYNC
5	D0N	D1N	D2N
6	D3N	D4N	D5N
7	D6N	D7N	A1
8	A2	A3	
9	A12	A13	A14
10	A15	A16	A17
11	A18	MEMWN	MEMRN
12		RCMY0	RCMY1
13	RCMY2	RCMY3	RCMY4
14	RCMY5	RCMY6	RCMY7
15	RCMC0	RCMC1	RCMC2
16	RCMC3	RCMC4	RCMC5
17	RCMC6	RCMC7	RCMK0
18	RCMK1	RCMK2	RCMK3
19	RCMK4	RCMK5	RCMK6
20	RCMK7	IF Y/VBS 0	IF Y/VBS 1
21	IF Y/VBS 2	IF Y/VBS 3	IF Y/VBS 4
22	IF Y/VBS 5	IF Y/VBS 6	IF Y/VBS 7
23	IF Y/VBS 8	IF Y/VBS 9	IF R-Y 0
24	IF R-Y 1	IF R-Y 2	IF R-Y 3
25	IF R-Y 4	IF R-Y 5	IF R-Y 6
26	IF R-Y 7	IF B-Y 0	IF B-Y 1
27	IF B-Y 2	IF B-Y 3	IF B-Y 4
28	IF B-Y 5	IF B-Y 6	IF B-Y 7
29	IF K0	IF K1	IF K2
30	IF K3	IF K4	IF K5
31	IF K6	IF K7	R-Y(-1)
32	(+27M)	(-27M)	B-Y(-1)

CN2

	A	B	C
1	+SCLK	-SCLK	+VD
2	+1/2SCLK	-1/2SCLK	-VD
3	+HD	-HD	1/4SCLK
4	OJE	BLK	SYNC
5	D0N	D1N	D2N
6	D3N	D4N	D5N
7	D6N	D7N	D8N
8	D9N	D10N	D11N
9	D12N	D13N	D14N
10	D15N	A1	A2
11	A3		A12
12	A13	A14	A15
13	A16	A17	A18
14	MEMWN	MEMRN	
15			
16			
17			
18			
19			
20		IF Y/VBS 0	IF Y/VBS 1
21	IF Y/VBS 2	IF Y/VBS 3	IF Y/VBS 4
22	IF Y/VBS 5	IF Y/VBS 6	IF Y/VBS 7
23	IF Y/VBS 8	IF Y/VBS 9	IF R-Y 0
24	IF R-Y 1	IF R-Y 2	IF R-Y 3
25	IF R-Y 4	IF R-Y 5	IF R-Y 6
26	IF R-Y 7	IF B-Y 0	IF B-Y 1
27	IF B-Y 2	IF B-Y 3	IF B-Y 4
28	IF B-Y 5	IF B-Y 6	IF B-Y 7
29	IF K0	IF K1	IF K2
30	IF K3	IF K4	IF K5
31	IF K6	IF K7	R-Y(-1)
32	(+27M)	(-27M)	B-Y(-1)

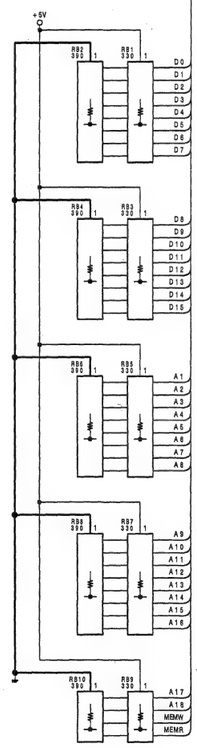

CN15

B	C
BDY1	BDY2
BDY4	BDY5
BDY7	
BDC1	BDC2
BDC4	BDC5
BDC7	
BDK1	BDK2
BDK4	BDK5
BDK7	
MOT1	MOT2
GND	GND

CN12

	A	B	C
1			
2			
3			
4			
5			
6			
7			
8			
9			
10			
11			
12			
13			
14			
15			
16			
17			
18			
19			
20			
21			
22			
23			
24			
25			
26			
27			
28			
29			
30			
31			
32	GND	GND	GND

CN9 ×1

	A	B	C
1	G	G	G
2	G	Y IN	
3	G	G	G
4	G	G	G
5		C IN	G
6	G	G	G
7	G	G	G
8	G	K IN	
9	G	G	G
10	G	G	G
11		Z IN	G
12	G	G	G
13	G	G	G
14	G	Y OUT1	
15	G	G	G
16		Y OUT2	G
17	G	G	G
18	G	C OUT1	
19	G	G	G
20		C OUT2	G
21	G	G	G
22	G	K OUT1	
23	G	G	G
24		K OUT2	G
25	G	G	G
26	G	Z OUT1	
27	G	G	G
28		Z OUT2	G
29	G	G	G
30			
31			
32	GND	GND	GND

CN6 ×1

	A	B	C
1			
2			
3			
4			
5			
6			
7			
8			
9			
10			
11			
12			
13			
14			
15			
16			
17			
18			
19			
20			
21			
22			
23			
24			
25			
26			
27			
28			
29	DSV OUT1	G	DSV OUT2
30	G		G
31	DSK OUT1	G	DSK OUT2
32	GND	GND	GND

CN3 ×1

	A	B	C
1	GEN LOCK	G	
2	G		
3			
4			
5			
6			
7			
8			
9			
10			
11	G		G
12	Y/VBS IN	G	R-Y IN
13	G		G
14	B-Y IN	G	KEY IN
15	G		G
16			
17	G		G
18	Y/VBS OUT1	G	R-Y OUT1
19	G		G
20	B-Y OUT1	G	KEY OUT1
21	G		G
22	Y/VBS OUT2	G	R-Y OUT2
23	G		G
24	B-Y OUT2	G	KEY OUT2
25	G	G	G
26	G	G	G
27	DSV IN	G	DSK IN
28	G		G
29	DSV OUT1	G	DSV OUT2
30	G		G
31	DSK OUT1	G	DSK OUT2
32	GND	GND	GND

MB-305(1/2)

1-636-824-11
DME-5000(J,UC)

MB-305;MOTHER BOARD

CN56

1	
2	
3	PS THRM
4	GND
5	FAN1
6	FAN2
7	FAN3

CN52

	A	B	C
1	GND	GND	GND
2	GND	GND	GND
3	GND	GND	GND
4	+5V	+5V	+5V
5	+5V	+5V	+5V
6	+5V	+5V	+5V
7			
8	FAN1	FAN2	FAN3
9	PS THRM	GND	
10			
11			
12			
13			
14			
15			
16			
17			
18			
19			
20			
21			
22			
23			
24			
25			
26			
27			
28			
29			
30			
31			
32			

CN49

	A	B	C
1	GND	GND	GND
2	GND	GND	GND
3	GND	GND	GND
4	+5V	+5V	+5V
5	+5V	+5V	+5V
6	+5V	+5V	+5V
7			
8			
9			
10			
11			
12			
13			
14			
15			
16			
17	GRPY0	GRPY1	GRPY2
18	GRPY3	GRPY4	GRPY5
19	GRPY6	GRPY7	
20	GRPC0	GRPC1	GRPC2
21	GRPC3	GRPC4	GRPC5
22	GRPC6	GRPC7	
23	GRPK0	GRPK1	GRPK2
24	GRPK3	GRPK4	GRPK5
25	GRPK6	GRPK7	
26			
27			
28			
29			
30			
31			
32			

GRP 1/2

CN48

	A	B	C
1	GND	GND	GND
2	GND	GND	GND
3	GND	GND	GND
4	+5V	+5V	+5V
5	+5V	+5V	+5V
6	+5V	+5V	+5V
7			
8	RDAX0	RDAX1	RDAX2
9	RDAX3	RDAX4	RDAX5
10	RDAX6	RDAX7	RDAX8
11	RDAX9	RDAX10	RDAX11
12	RDAY0	RDAY1	RDAY2
13	RDAY3	RDAY4	RDAY5
14	RDAY6	RDAY7	RDAY8
15	RDAY9	RDAY10	RDAY11
16	HSIGN	VSIGN	
17			
18	EXPX0	EXPX1	EXPX2
19	EXPX3	EXPX4	EXPX5
20	EXPX6	EXPX7	EXPX8
21	EXPX9	EXPX10	EXPX11
22	EXPY0	EXPY1	EXPY2
23	EXPY3	EXPY4	EXPY5
24	EXPY6	EXPY7	EXPY8
25	EXPY9	EXPY10	EXPY11
26			
27	WPK0	WPK1	WPK2
28	WPK3	WPK4	WPK5
29	WPK6	WPK7	WPSEL
30	BOD0	BOD1	BOD2
31	BOD3	BOD4	BOD5
32	BOD6	BOD7	

CN43

	A	B	C
1	GND	GND	GND
2	GND	GND	GND
3	GND	GND	GND
4	+5V	+5V	+5V
5	+5V	+5V	+5V
6	+5V	+5V	+5V
7			
8	RDAX0	RDAX1	RDAX2
9	RDAX3	RDAX4	RDAX5
10	RDAX6	RDAX7	RDAX8
11	RDAX9	RDAX10	RDAX11
12	RDAY0	RDAY1	RDAY2
13	RDAY3	RDAY4	RDAY5
14	RDAY6	RDAY7	RDAY8
15	RDAY9	RDAY10	RDAY11
16	HSIGN	VSIGN	
17			
18	EXPX0	EXPX1	EXPX2
19	EXPX3	EXPX4	EXPX5
20	EXPX6	EXPX7	EXPX8
21	EXPX9	EXPX10	EXPX11
22	EXPY0	EXPY1	EXPY2
23	EXPY3	EXPY4	EXPY5
24	EXPY6	EXPY7	EXPY8
25	EXPY9	EXPY10	EXPY11
26			
27	WPK0	WPK1	WPK2
28	WPK3	WPK4	WPK5
29	WPK6	WPK7	WPSEL
30	BOD0	BOD1	BOD2
31	BOD3	BOD4	BOD5
32	BOD6	BOD7	

CN40

	A	B	C
1	GND	GND	GND
2	GND	GND	GND
3	GND	GND	GND
4	+5V	+5V	+5V
5	+5V	+5V	+5V
6	+5V	+5V	+5V
7			
8			
9			
10			
11			
12			
13			
14			
15			
16	HSIGN	VSIGN	
17			
18			
19			
20			
21			
22			
23			
24			
25			
26			
27			
28			
29			
30			
31			
32			

WPBD 1/2

+1/2SCLK +SCLK -SCLK -1/2SCLK -HD +HD

R1 110 R1 110 R3 110

+VD -VD

R4 110

CN53

	A	B	C
1	+SCLK	-SCLK	+VD
2	+1/2SCLK	-1/2SCLK	-VD
3	+HD	-HD	1/4SCLK
4	RESETN	BUSSP	SYNC
5	D0N	D1N	D2N
6	D3N	D4N	D5N
7	D6N	D7N	D8N
8	D9N	D10N	D11N
9	D12N	D13N	D14N
10	D15N	A1	A2
11	A3	A4	A5
12	A6	A7	A8
13	A9	A10	A11
14	A12	A13	A14
15	A15	A16	A17
16	A18	MEMWN	MEMRN
17			
18			
19			
20	GD0	GD1	GD2
21	GD3	GD4	GD5
22	GD6	GD7	GD8
23	GD9	GD10	GD11
24	GD12	GD13	GD14
25	GD15		
26	GA0	GA1	GA2
27	GA3	GA4	GA5
28	GA6	GA7	GA8
29	GA9	GA10	GA11
30	GCS	GW	GR
31	GBHE	GBUSY	GIR0
32	GSP0	GSP1	GSP2

CN50

	A	B	C
1	+SCLK	-SCLK	+VD
2	+1/2SCLK	-1/2SCLK	-VD
3	+HD	-HD	1/4SCLK
4	RESETN	BUSSP	SYNC
5	D0N	D1N	D2N
6	D3N	D4N	D5N
7	D6N	D7N	D8N
8	D9N	D10N	D11N
9	D12N	D13N	D14N
10	D15N	A1	A2
11	A3	A4	A5
12	A6	A7	A8
13	A9	A10	A11
14	A12	A13	A14
15	A15	A16	A17
16	A18	MEMWN	MEMRN
17			
18			
19			
20	GD0	GD1	GD2
21	GD3	GD4	GD5
22	GD6	GD7	GD8
23	GD9	GD10	GD11
24	GD12	GD13	GD14
25	GD15		
26	GA0	GA1	GA2
27	GA3	GA4	GA5
28	GA6	GA7	GA8
29	GA9	GA10	GA11
30	GCS	GW	GR
31	GBHE	GBUSY	GIR0
32	GSP0	GSP1	GSP2

CN47

	A	B	C
1	+SCLK	-SCLK	+VD
2	+1/2SCLK	-1/2SCLK	-VD
3	+HD	-HD	1/4SCLK
4	RESETN		SYNC
5	D0N	D1N	D2N
6	D3N	D4N	D5N
7	D6N	D7N	D8N
8	D9N	D10N	D11N
9	D12N	D13N	D14N
10	D15N	A1	A2
11	A3	A4	A5
12	A6	A7	A8
13	A9	A10	A11
14	A12	A13	A14
15	A15	A16	A17
16	A18	MEMWN	MEMRN
17	LGHT0	LGHT1	LGHT2
18	LGHT3	LGHT4	LGHT5
19	LGHT6	LGHT7	LGHT8
20	LGHT9	LGHT10	LGHT11
21			
22		RETX0	RETX1
23	RETX2	RETX3	RETX4
24	RETX5	RETX6	RETX7
25	RETX8	RETX9	RETX10
26	RETX11	RETX12	RETX13
27	RETX14	RETX15	RETY0
28	RETY1	RETY2	RETY3
29	RETY4	RETY5	RETY6
30	RETY7	RETY8	RETY9
31	RETY10	RETY11	RETY12
32	RETY13	RETY14	RETY15

CN44

	A	B	C
1	+SCLK	-SCLK	+VD
2	+1/2SCLK	-1/2SCLK	-VD
3	+HD	-HD	1/4SCLK
4	RESETN	BUSSP	SYNC
5	D0N	D1N	D2N
6	D3N	D4N	D5N
7	D6N	D7N	D8N
8	D9N	D10N	D11N
9	D12N	D13N	D14N
10	D15N	A1	A2
11	A3	A4	A5
12	A6	A7	A8
13	A9	A10	A11
14	A12	A13	A14
15	A15	A16	A17
16	A18	MEMWN	MEMRN
17	LGHT0	LGHT1	LGHT2
18	LGHT3	LGHT4	LGHT5
19	LGHT6	LGHT7	LGHT8
20	LGHT9	LGHT10	LGHT11
21			
22		RETX0	RETX1
23	RETX2	RETX3	RETX4
24	RETX5	RETX6	RETX7
25	RETX8	RETX9	RETX10
26	RETX11	RETX12	RETX13
27	RETX14	RETX15	RETY0
28	RETY1	RETY2	RETY3
29	RETY4	RETY5	RETY6
30	RETY7	RETY8	RETY9
31	RETY10	RETY11	RETY12
32	RETY13	RETY14	RETY15

LGHT 1/2

CN41

	A	B	C
1	+SCLK	-SCLK	+VD
2	+1/2SCLK	-1/2SCLK	-VD
3	+HD	-HD	1/4SCLK
4	RESETN	BUSSP	SYNC
5	D0N	D1N	D2N
6	D3N	D4N	D5N
7	D6N	D7N	D8N
8	D9N	D10N	D11N
9	D12N	D13N	D14N
10	D15N	A1	A2
11	A3	A4	A5
12	A6	A7	A8
13	A9	A10	A11
14	A12	A13	A14
15	A15	A16	A17
16	A18	MEMWN	MEMRN
17			
18			
19			
20			
21			
22		RETX0	RETX1
23	RETX2	RETX3	RETX4
24	RETX5	RETX6	RETX7
25	RETX8	RETX9	RETX10
26	RETX11	RETX12	RETX13
27	RETX14	RETX15	RETY0
28	RETY1	RETY2	RETY3
29	RETY4	RETY5	RETY6
30	RETY7	RETY8	RETY9
31	RETY10	RETY11	RETY12
32	RETY13	RETY14	RETY15

+5V

CN59 1 +5V
CN61 1 +5V
CN63 1 +5V
CN65 1 +5V
CN67 1 +5V
CN69 1 +5V
CN71 1 +5V
CN73 1 +5V

CN60 1 GND
CN62 1 GND
CN64 1 GND
CN66 1 GND
CN68 1 GND
CN70 1 GND
CN72 1 GND
CN74 1 GND

CN57 1 -5V

-5V

CN58 1 GND

CN54 +1

	A	B	C
1	GND	GND	GND
2	TX1+	(TXC1+)	RX1+
3	TX1-	(TXC1-)	RX1-
4		(RXC1+)	(RXC1-)
5	GND	GND	GND
6	TX2+	(TXC2+)	RX2+
7	TX2-	(TXC2-)	RX2-
8		(RXC2+)	(RXC2-)
9	GND	GND	GND
10	TX3+	(TXC3+)	RX3+
11	TX3-	(TXC3-)	RX3-
12		(RXC3+)	(RXC3-)
13	GND	GND	GND
14	TX4+	(TXC4+)	RX4+
15	TX4-	(TXC4-)	RX4-
16		(RXC4+)	(RXC4-)
17	GND	GND	GND
18	GPIO1	GPIO1G	GPI11
19	GPIO2	GPIO2G	GPI12
20	GPIO3	GPIO3G	GPI13
21	GPIO4	GPIO4G	GPI14
22			GPI1G
23			
24			
25			
26			
27			
28			
29			
30	RXD	TXD	DSR
31	RTS	CTS	DTR
32	GND	GND	GND

CN51 +1

	A	B	C
1	RXD	TXD	DSR
2	RTS	CTS	DTR
3			
4	AG	AG	AG
5	R	G	B
6	AG	AG	AG
7			SYNC
8			
9			
10			
11			
12			
13			
14			
15			
16			
17			
18			
19			
20			
21			
22			
23			
24			
25			
26	GND		
27	SYNC		
28	GND	GND	GND
29	R	G	B
30	GND	GND	GND
31	GND	COMP OUT	GND
32	GND	GND	GND

CN46

	A	B	C
1	3DRX0	3DRX1	3DRX2
2	3DRX3	3DRX4	3DRX5
3	3DRX6	3DRX7	3DRX8
4	3DRX9	3DRX10	3DRX11
5	3DRX12	3DRX13	3DRX14
6	3DRX15		
7	3DRY0	3DRY1	3DRY2
8	3DRY3	3DRY4	3DRY5
9	3DRY6	3DRY7	3DRY8
10	3DRY9	3DRY10	3DRY11
11	3DRY12	3DRY13	3DRY14
12	3DRY15		
13			
14			
15			
16	SP0	SP1	SP2
17	SP3	SP4	SP5
18	SP6	SP7	SP8
19	SP9	SP10	SP11
20	SP12	SP13	SP14
21	SP15	SP16	SP17
22	SP18	SP19	SP20
23	SP21	SP22	SP23
24	SP24	SP25	SP26
25	SP27	SP28	SP29
26	SP30	SP31	SP32
27	SP33	SP34	SP35
28	SP36	SP37	SP38
29	SP39	SP40	SP41
30	SP42	SP43	SP44
31	SP45	SP46	SP47
32	GND	GND	GND

CN45

	A	B	C
1	3DRX0	3DRX1	3DRX2
2	3DRX3	3DRX4	3DRX5
3	3DRX6	3DRX7	3DRX8
4	3DRX9	3DRX10	3DRX11
5	3DRX12	3DRX13	3DRX14
6	3DRX15		
7	3DRY0	3DRY1	3DRY2
8	3DRY3	3DRY4	3DRY5
9	3DRY6	3DRY7	3DRY8
10	3DRY9	3DRY10	3DRY11
11	3DRY12	3DRY13	3DRY14
12	3DRY15		
13			
14			
15			
16	SP0	SP1	SP2
17	SP3	SP4	SP5
18	SP6	SP7	SP8
19	SP9	SP10	SP11
20	SP12	SP13	SP14
21	SP15	SP16	SP17
22	SP18	SP19	SP20
23	SP21	SP22	SP23
24	SP24	SP25	SP26
25	SP27	SP28	SP29
26	SP30	SP31	SP32
27	SP33	SP34	SP35
28	SP36	SP37	SP38
29	SP39	SP40	SP41
30	SP42	SP43	SP44
31	SP45	SP48	SP47
32	GND	GND	GND

CN42

	A	B	C
1	3DRX0	3DRX1	3DRX2
2	3DRX3	3DRX4	3DRX5
3	3DRX6	3DRX7	3DRX8
4	3DRX9	2DRX10	3DRX11
5	3DRX12	3DRX13	3DRX14
6	3DRX15		
7	3DRY0	3DRY1	3DRY2
8	3DRY3	3DRY4	3DRY5
9	3DRY6	3DRY7	3DRY8
10	3DRY9	3DRY10	3DRY11
11	3DRY12	3DRY13	3DRY14
12	3DRY15		
13			
14			
15			
16	SP0	SP1	SP2
17	SP3	SP4	SP5
18	SP6	SP7	SP8
19	SP9	SP10	SP11
20	SP12	SP13	SP14
21	SP15	SP16	SP17
22	SP18	SP19	SP20
23	SP21	SP22	SP23
24	SP24	SP25	SP26
25	SP27	SP28	SP29
26	SP30	SP31	SP32
27	SP33	SP34	SP35
28	SP36	SP37	SP38
29	SP39	SP40	SP41
30	SP42	SP43	SP44
31	SP45	SP48	SP47
32	GND	GND	GND

8-271 8-272

A B C D E F G H

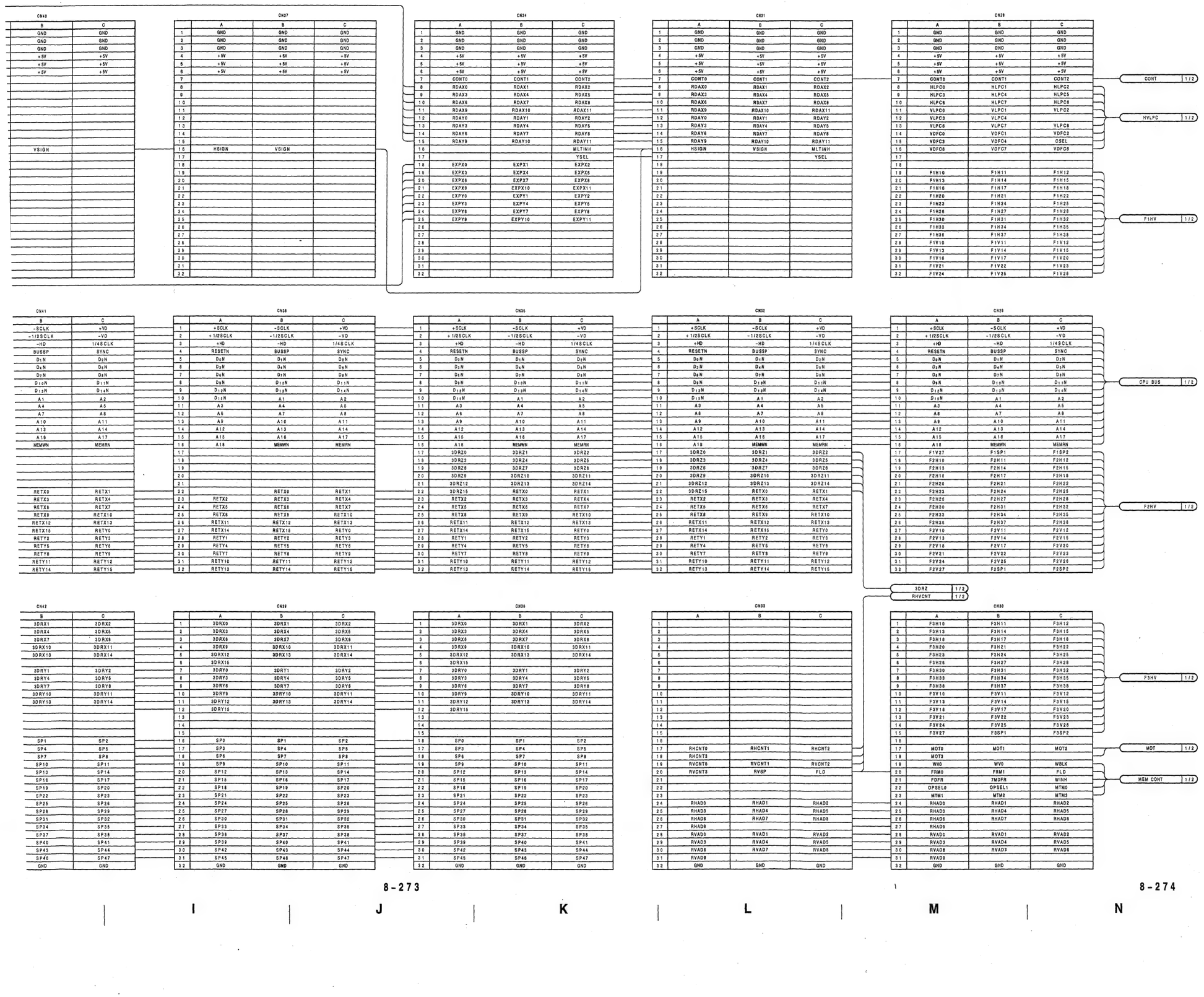

MB-305(2/2)

1-636-824-11
DME-5000(J,UC)

FRAME

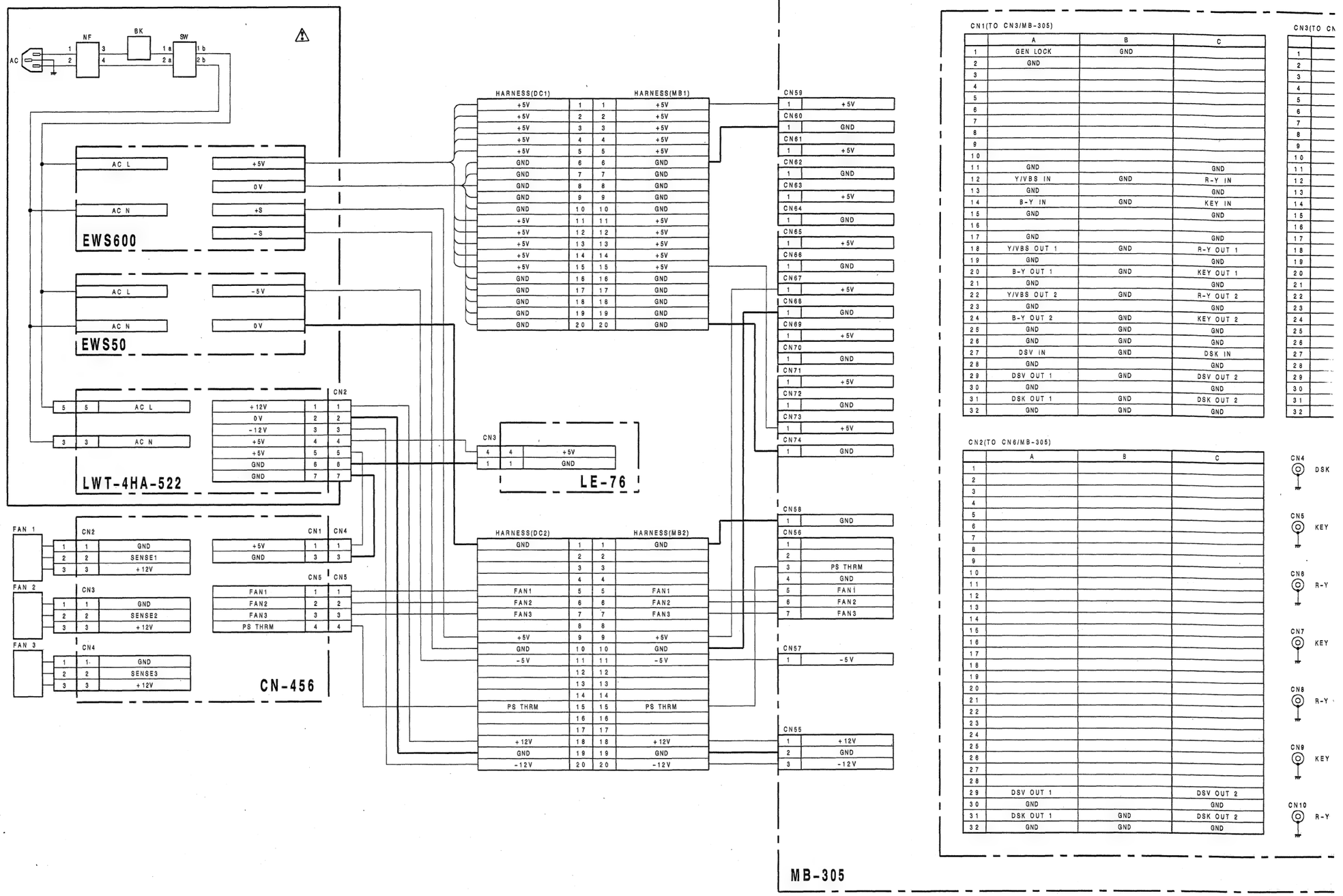

CN1(TO CN3/MB-305)

	A	B	C
1	GEN LOCK	GND	
2	GND		
3			
4			
5			
6			
7			
8			
9			
10			
11	GND		GND
12	Y/VBS IN	GND	R-Y IN
13	GND		GND
14	B-Y IN	GND	KEY IN
15	GND		GND
16			
17	GND		GND
18	Y/VBS OUT 1	GND	R-Y OUT 1
19	GND		GND
20	B-Y OUT 1	GND	KEY OUT 1
21	GND		GND
22	Y/VBS OUT 2	GND	R-Y OUT 2
23	GND		GND
24	B-Y OUT 2	GND	KEY OUT 2
25	GND	GND	GND
26	GND	GND	GND
27	DSV IN	GND	DSK IN
28	GND		GND
29	DSV OUT 1	GND	DSV OUT 2
30	GND		GND
31	DSK OUT 1	GND	DSK OUT 2
32	GND	GND	GND

CN3(TO CN

1	
2	
3	
4	
5	
6	
7	
8	
9	
10	
11	
12	
13	
14	
15	
16	
17	
18	
19	
20	
21	
22	
23	
24	
25	
26	
27	
28	
29	
30	
31	
32	

CN2(TO CN6/MB-305)

	A	B	C
1			
2			
3			
4			
5			
6			
7			
8			
9			
10			
11			
12			
13			
14			
15			
16			
17			
18			
19			
20			
21			
22			
23			
24			
25			
26			
27			
28			
29	DSV OUT 1		DSV OUT 2
30	GND		GND
31	DSK OUT 1	GND	DSK OUT 2
32	GND	GND	GND

CN4 DSK
CN5 KEY
CN6 R-Y
CN7 KEY
CN8 R-Y
CN9 KEY
CN10 R-Y

	C

SECTION 9
PRINTED CIRCUIT BOARD

ALU-11;REALTIME NUMERIC DATA PROCESSOR

ALU-11

CN1	B-1
CN2	F-1
CN3	J-1
E1	A-2
E2	K-1
E3	A-30
E4	K-30
F1	A-1
F2	A-1

NOTE:
IC NO.on this board show its address.

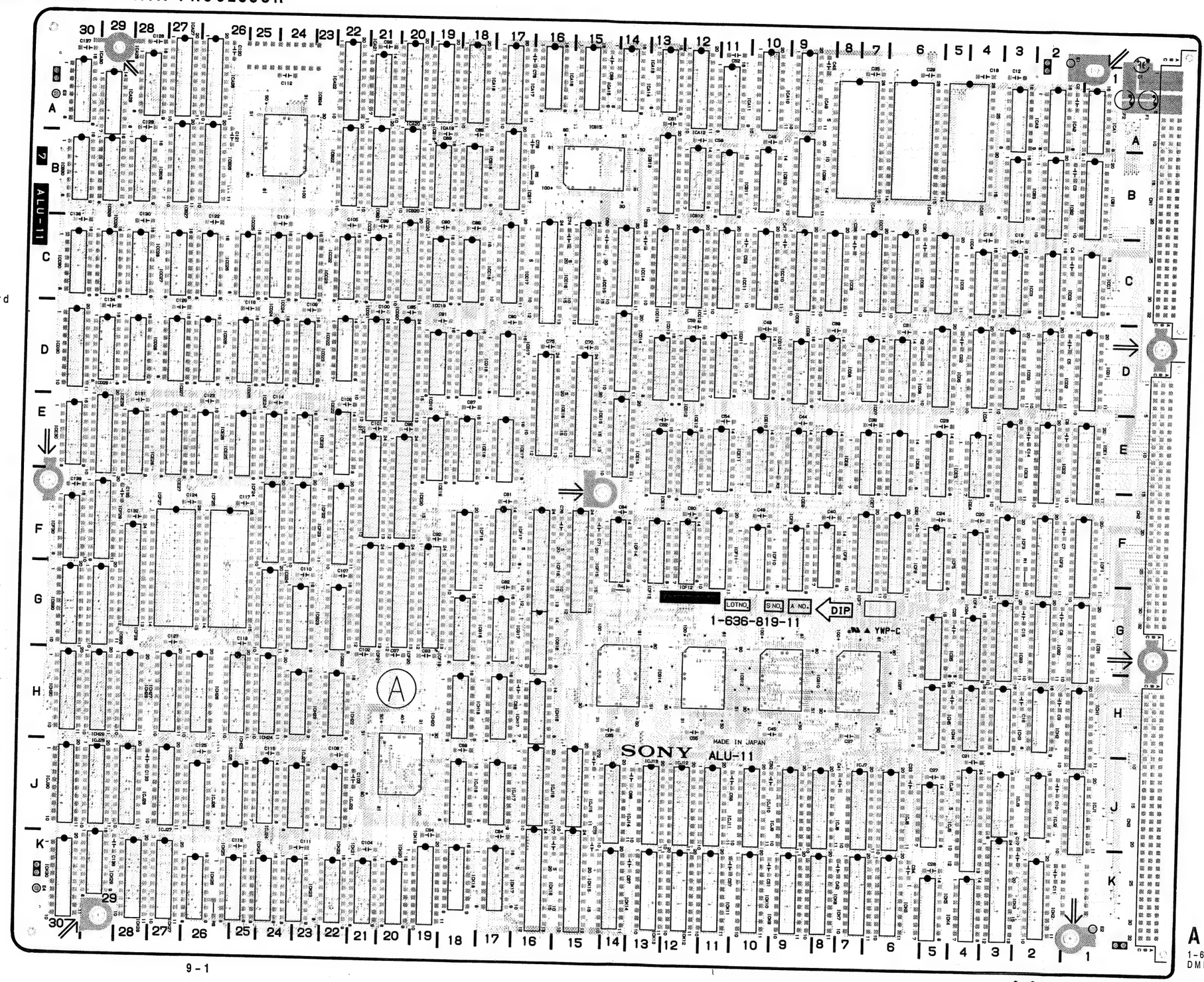

9-1 9-2

ALU-11 -A SIDE-
1-636-819-11
DME-5000-(J,UC)

CPU-82;SYSTEM CONTROL AND COMMUNICATION

CPU-82

CN1	A-1	RB1	B-2
CN2	E-1	RB2	B-1
CN3	G-1	RB3	B-1
		RB4	C-1
COR1	A-10	RB5	C-1
COR2	A-15	RB6	C-12
COR3	G-21	RB7	H-21
COR4	G-18	RB8	F-8
COR5	H-7	RB9	G-22
COR6	H-9	RB10	G-8
COR7	H-9	RB11	D-6
COR8	A-15	RB12	D-8
COR9	A-16	RB13	E-7
		RB14	D-9
D1	G-22	RB15	F-14
D2	G-22	RB16	F-10
D3	G-22	RB17	G-10
D4	G-22		
D5	G-22	RY1	G-1
D6	G-22	RY2	G-1
D7	G-22	RY3	G-1
D8	G-22	RY4	G-2
D9	G-19		
D10	G-2	S1	G-22
D11	G-2	S2	B-3
D12	G-1	S3	H-22
D13	G-1		
D14	H-2	TP1	C-6
D15	H-2	TP2	G-21
D16	H-2	TP3	G-12
D17	H-2		
D18	H-1	X1	E-9
D19	H-1	X2	H-9
D20	H-1		
D21	H-1		
E1	A-22		
E2	A-1		
E3	H-22		
E4	H-1		
F1	A-1		
Q1	G-21		

NOTE:
IC NO.on this board
show its address.

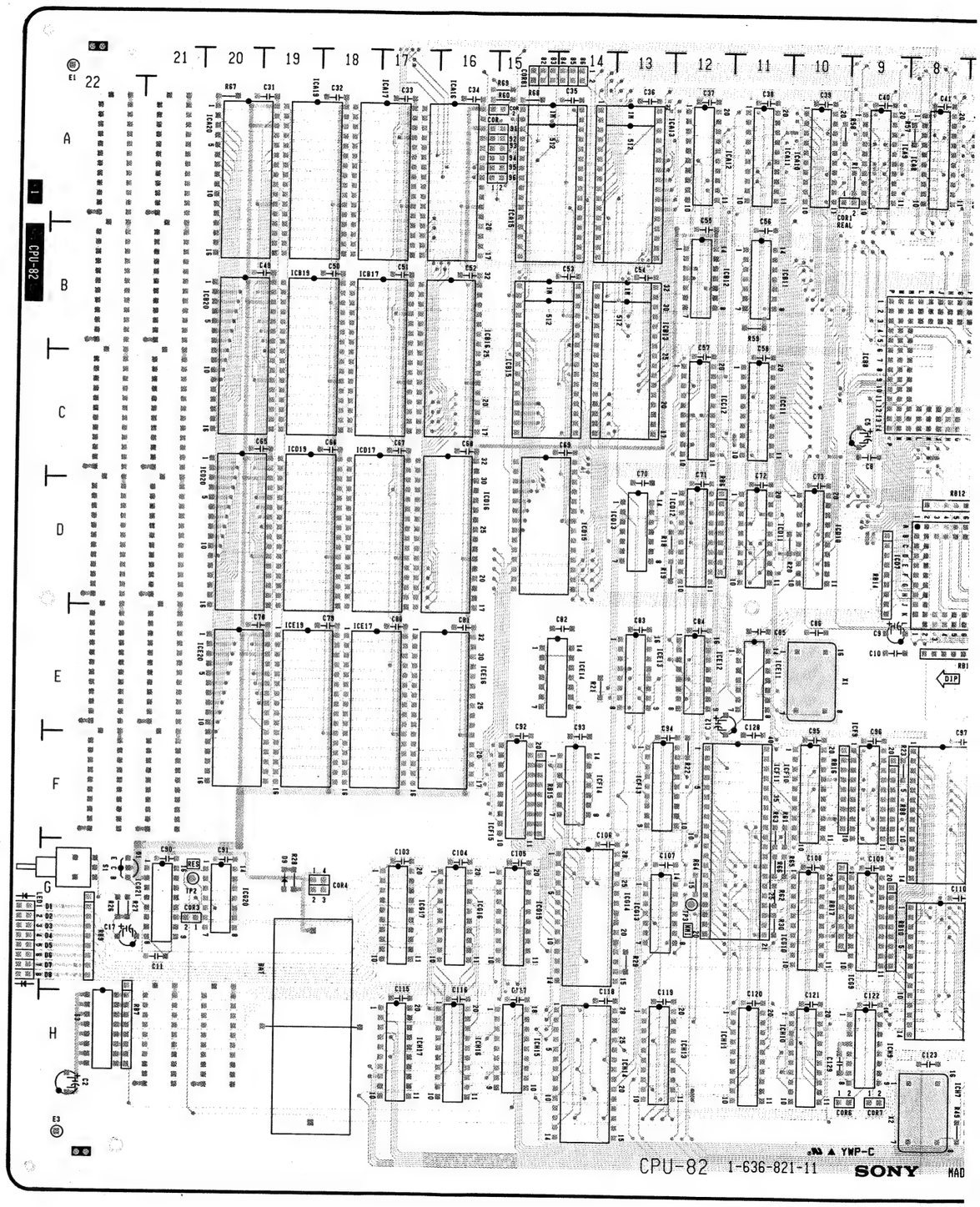

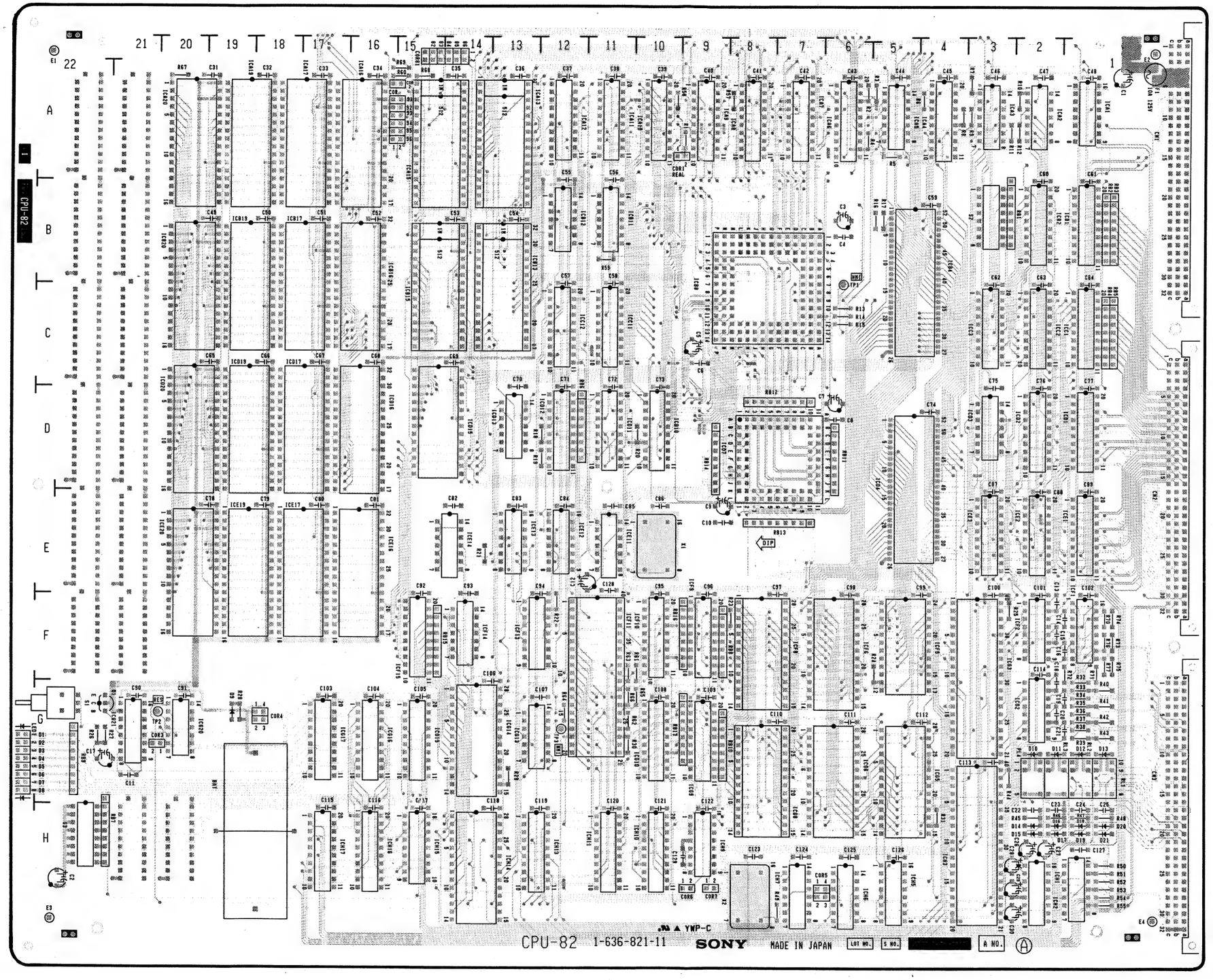

CPU-82 -A SIDE-
1-636-821-11
DME-5000(J,UC)

DLP-9;HORIZONTAL AND VERTICAL LOW PASS FILTER

DLP-9

CN1	B-1
CN2	E-1
CN3	J-1
CN4	A-14
CN5	A-21
CN6	A-23
CN7	K-14
CN8	K-21
E1	A-4
E2	K-1
E3	A-24
E4	J-25
F1	A-1
F2	A-2
RB1	H-4
RB2	E-5
RB3	A-6
RB4	A-5
RB5	G-8
RB6	J-8
RB7	H-8
S1	F-26
S2	G-26
S3	A-26
S4	B-26

NOTE:
IC NO.on this board show its address.

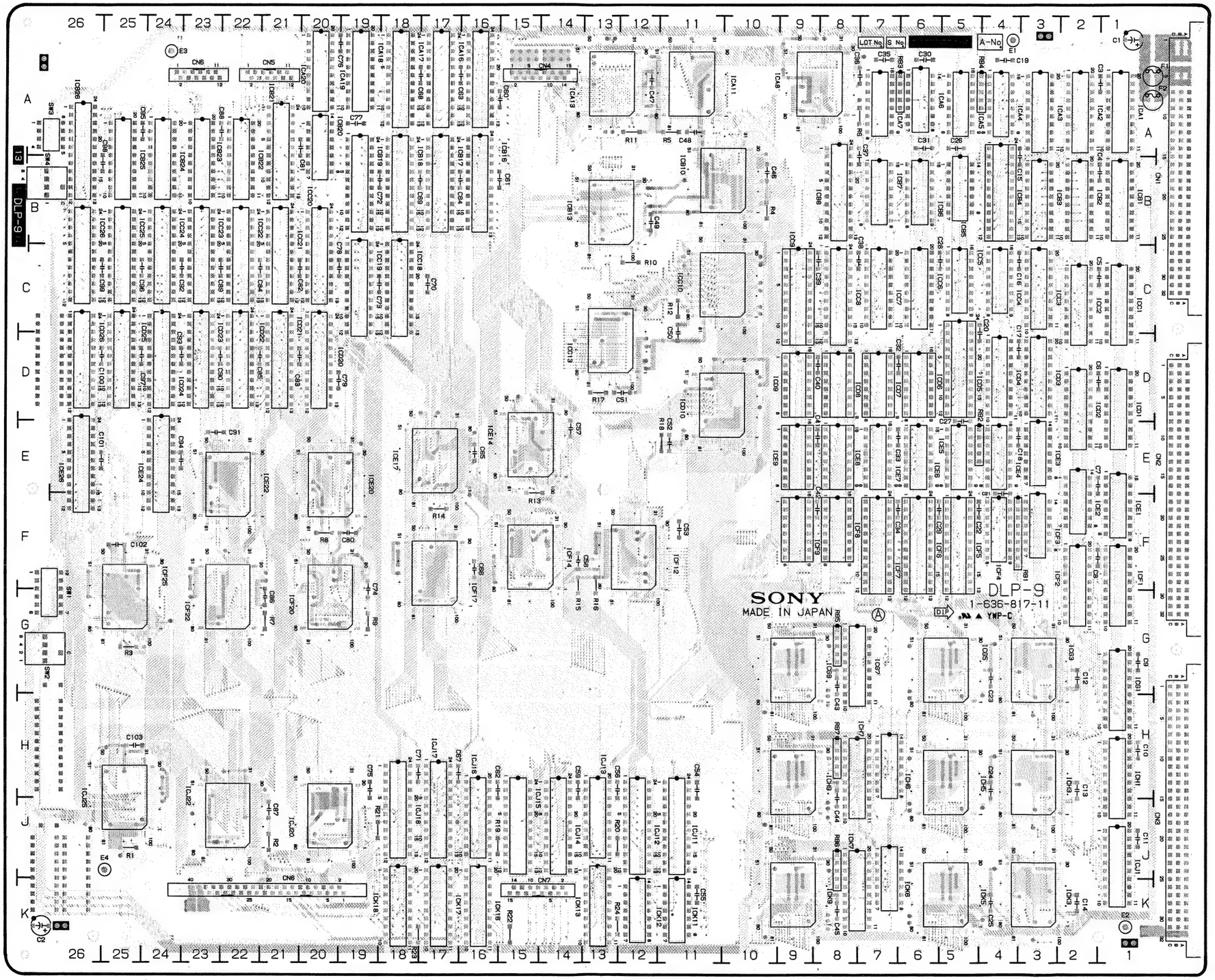

DLP-9 -A SIDE-
1-636-817-11
DME-5000(J,UC)

DLP-10;IIR VERTICAL LOW PASS FILTER

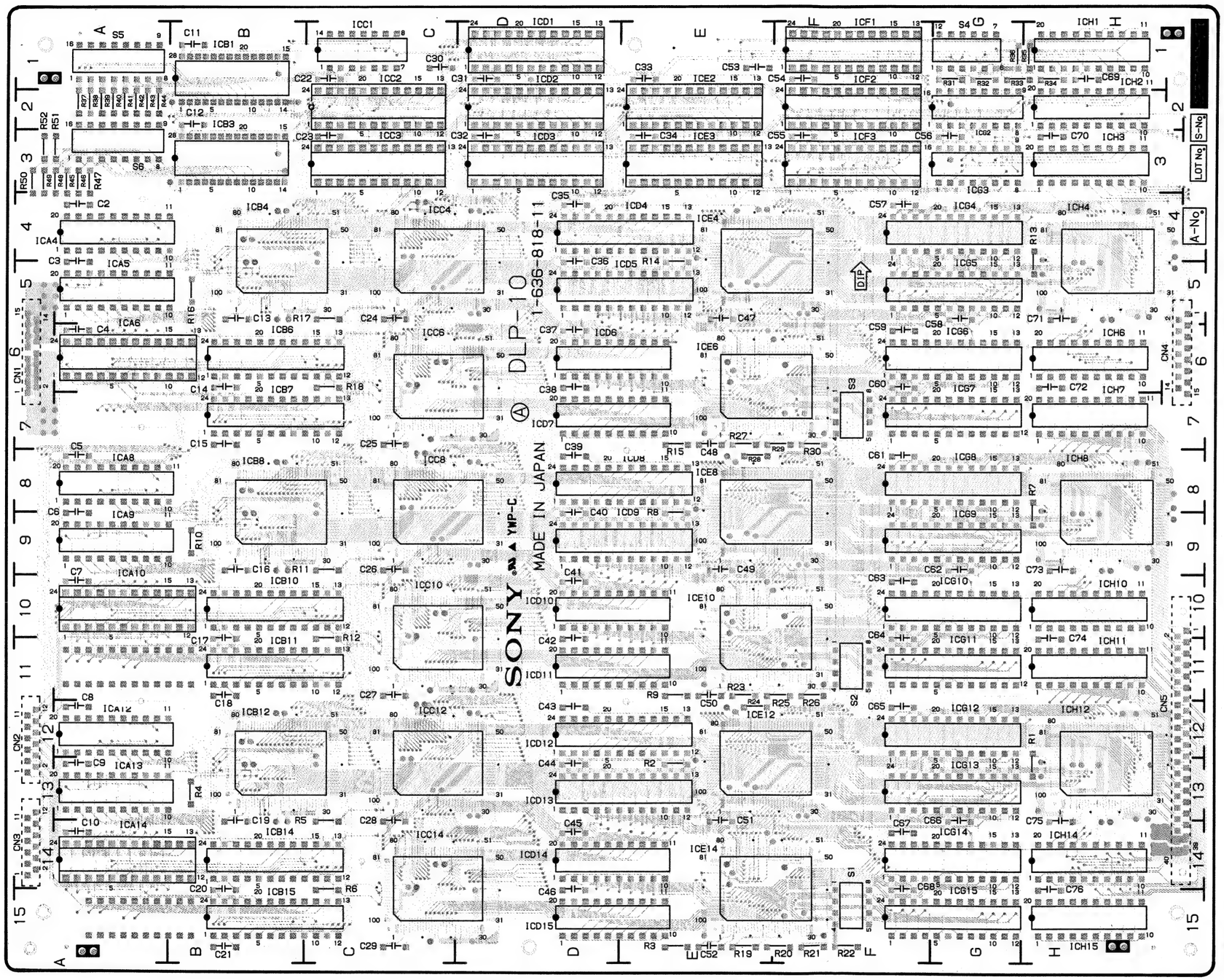

DLP-10

*CN1	A-6
*CN2	A-12
*CN3	A-14
*CN4	H-6
*CN5	H-12
S1	F-14
S2	F-11
S3	F-6
S4	G-1
S5	A-1
S6	A-2

NOTE:
IC NO.on this board show its address.

*:B SIDE

DLP-10 -A SIDE-

1-636-818-11
DME-5000(J,UC)

DPR-15;INPUT PIXEL EFFECT GENERATOR AND MONITOR DETECT

DPR-15

CN1	B-1
CN2	E-1
CN3	J-1
E1	A-1
E2	K-1
E3	A-32
E4	K-32
F1	A-1
F2	A-1
RB1	B-32
RB2	E-31
RB3	E-31
RB4	A-31
RB5	F-1
RB6	F-1
RB7	G-31
RB8	G-31
S1	C-32
S2	E-31
S3	E-32
S4	D-31
S5	D-31
S6	C-32

NOTE:
IC NO.on this board show its address.

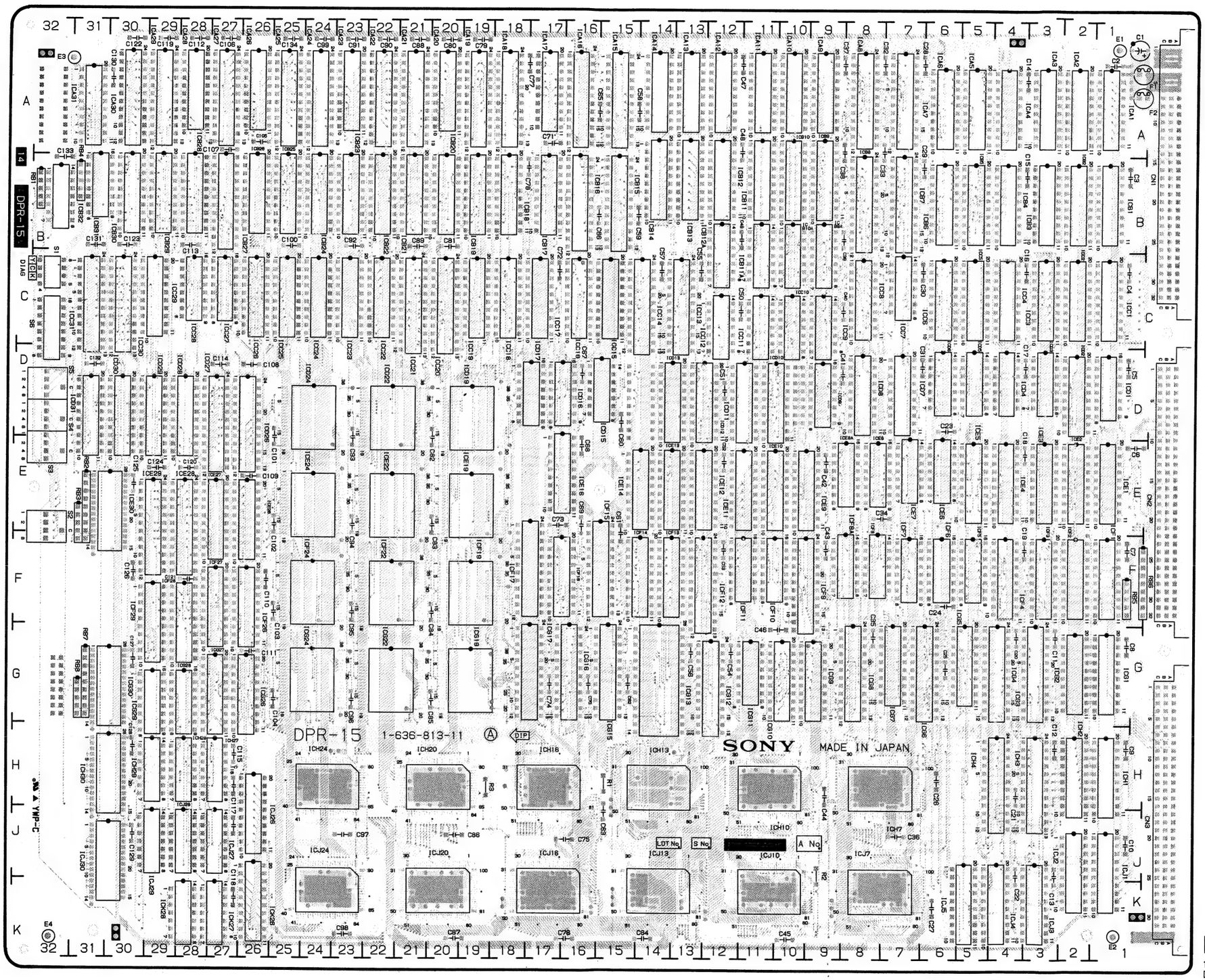

DPR-15 -A SIDE-
1-636-813-11
DME-5000(J,UC)

DPR-16

DPR-16;OUTPUT RECURSIVE EFFECT GENERATOR AND BORDER GENERATOR

DPR-16

CN1	B-1
CN2	G-1
CN3	L-1
COR1	G-35
COR2	C-33
COR3	G-33
COR4	C-33
COR5	D-32
E1	A-2
E2	M-2
E3	A-33
E4	M-34
F1	A-1
F2	A-1
RB1	H-1
RB2	G-14
RB3	J-19
RB4	A-34
RB5	B-34
RB6	B-34
RB7	C-34
RB8	D-34
RB9	D-34
RB10	E-34
RB11	J-34
RB12	K-34
RB13	K-34
RB14	M-34
RB15	C-9
RB16	M-20
RB17	G-34
S1	A-34
S2	A-34
S3	B-34
S4	C-34
S5	C-34
S6	D-34
S7	E-35
S8	H-34
S9	J-34
S10	K-34
S11	K-34
S12	L-34
S13	M-34

NOTE:
IC NO.on this board show its address.

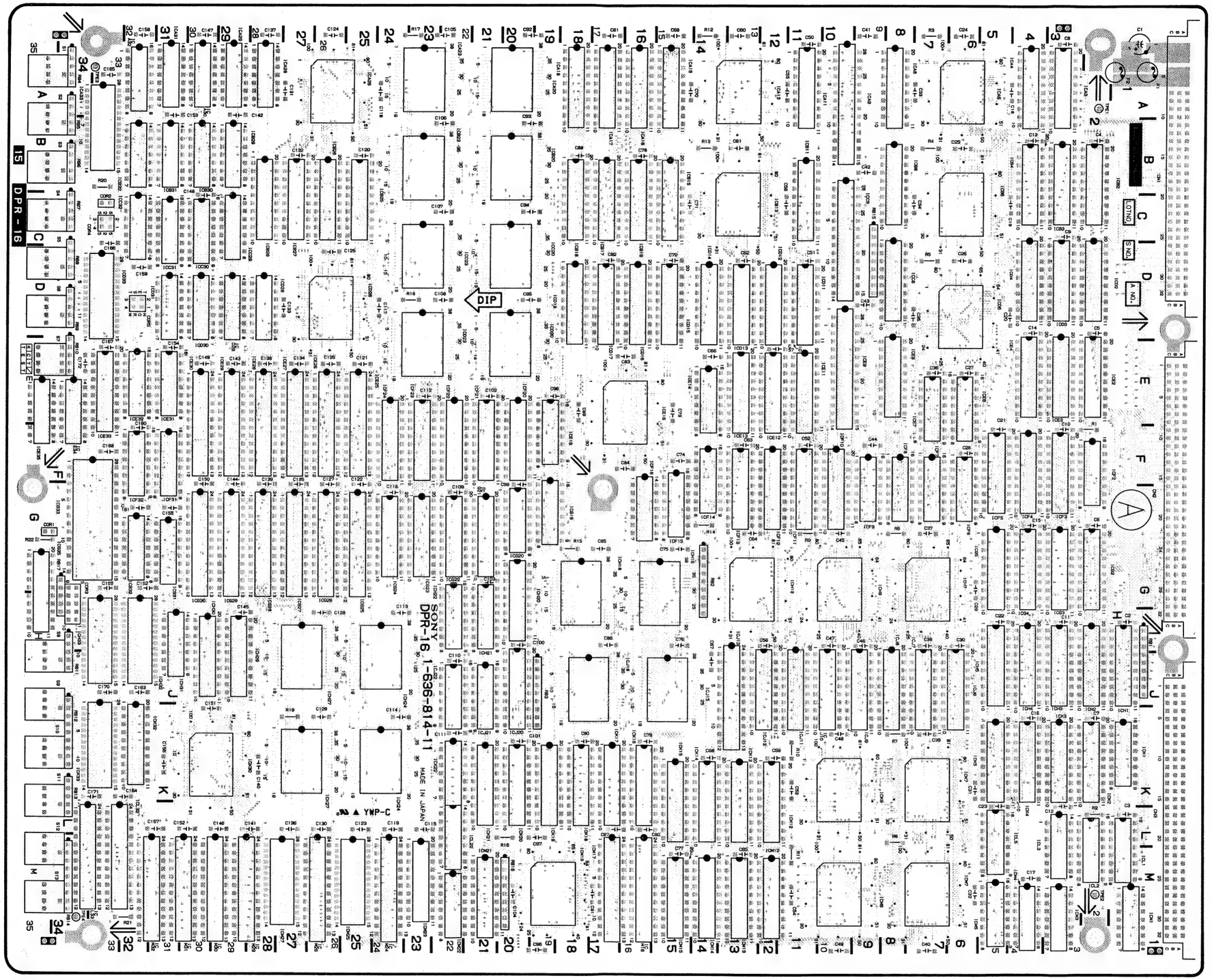

DPR-16 -A SIDE-
1-636-814-11
DME-5000(J,UC)

DPR-17;MEMORY ADDRESS SELECTOR AND WRITE ADDRESS GENERATOR

DPR-17

CN1	B-1
CN2	E-1
CN3	H-1
COR1	F-9
COR2	E-11
COR3	E-11
DL1	F-11
E1	A-2
E2	J-1
E3	A-19
E4	J-19
F1	A-1
F2	A-1
RB1	A-13
RB2	B-13
RB3	A-14
RB4	F-19
SW1	A-19
SW2	B-19
SW3	C-19
SW4	D-19
SW5	D-19
SW6	E-19
SW7	F-19

NOTE:
IC NO.on this board show its address.

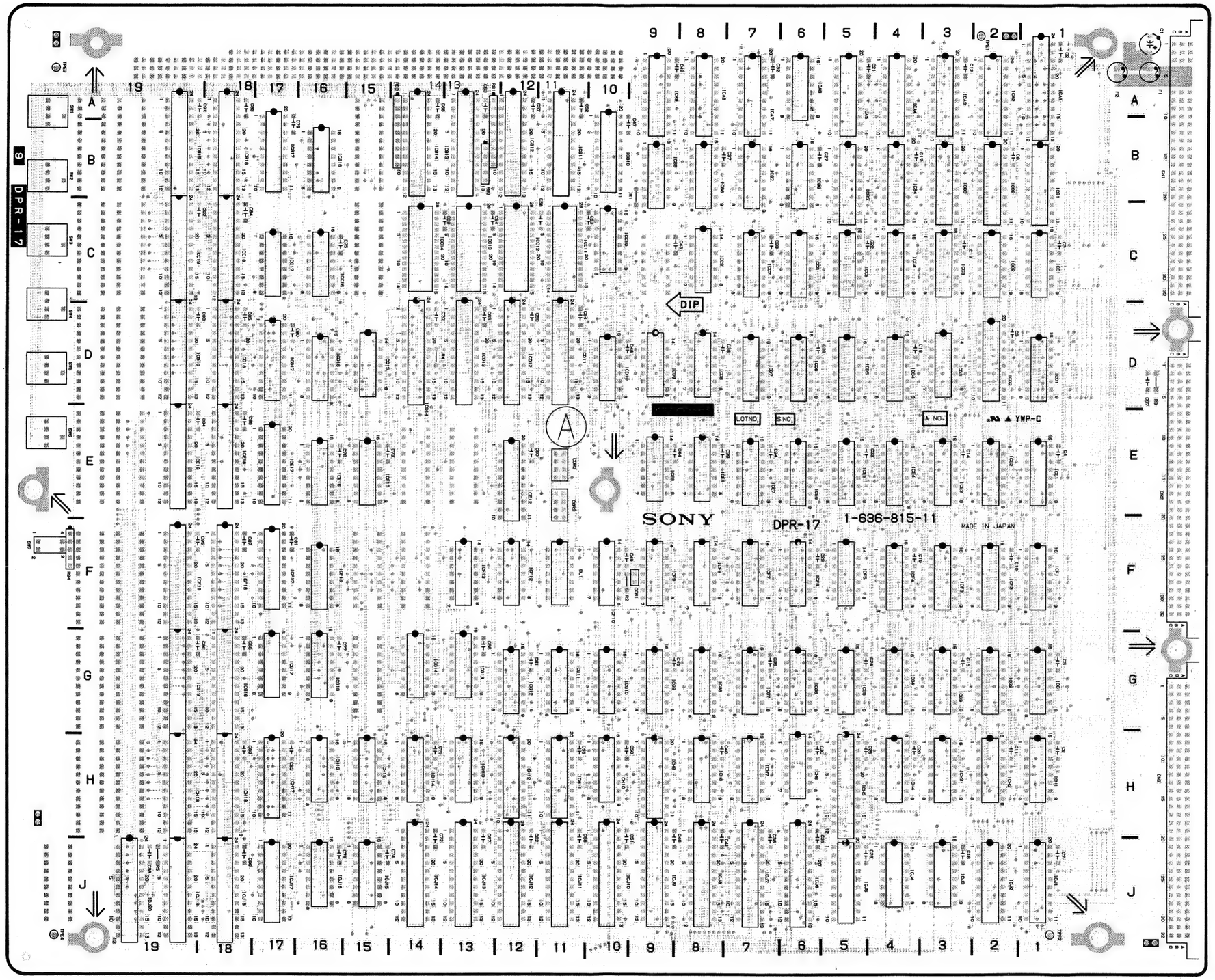

DPR-17 -A SIDE-
1-636-815-11
DME-5000(J,UC)

DPR-18;READ ADDRESS GENERATOR AND SPLIT MIRROR GENERATOR

DPR-18

CN1	B-0
CN2	E-0
CN3	H-0
COR2	B-19
E1	A-1
E2	H-1
E3	A-26
E4	H-26
F1	A-0
F2	A-0
RB1	A-17
RB2	A-18
RB3	B-18
S1	A-25
S2	A-25
S3	B-25
S4	B-25
S5	B-25
S6	C-25
S7	C-26
S8	F-25

NOTE:
IC NO.on this board show its address.

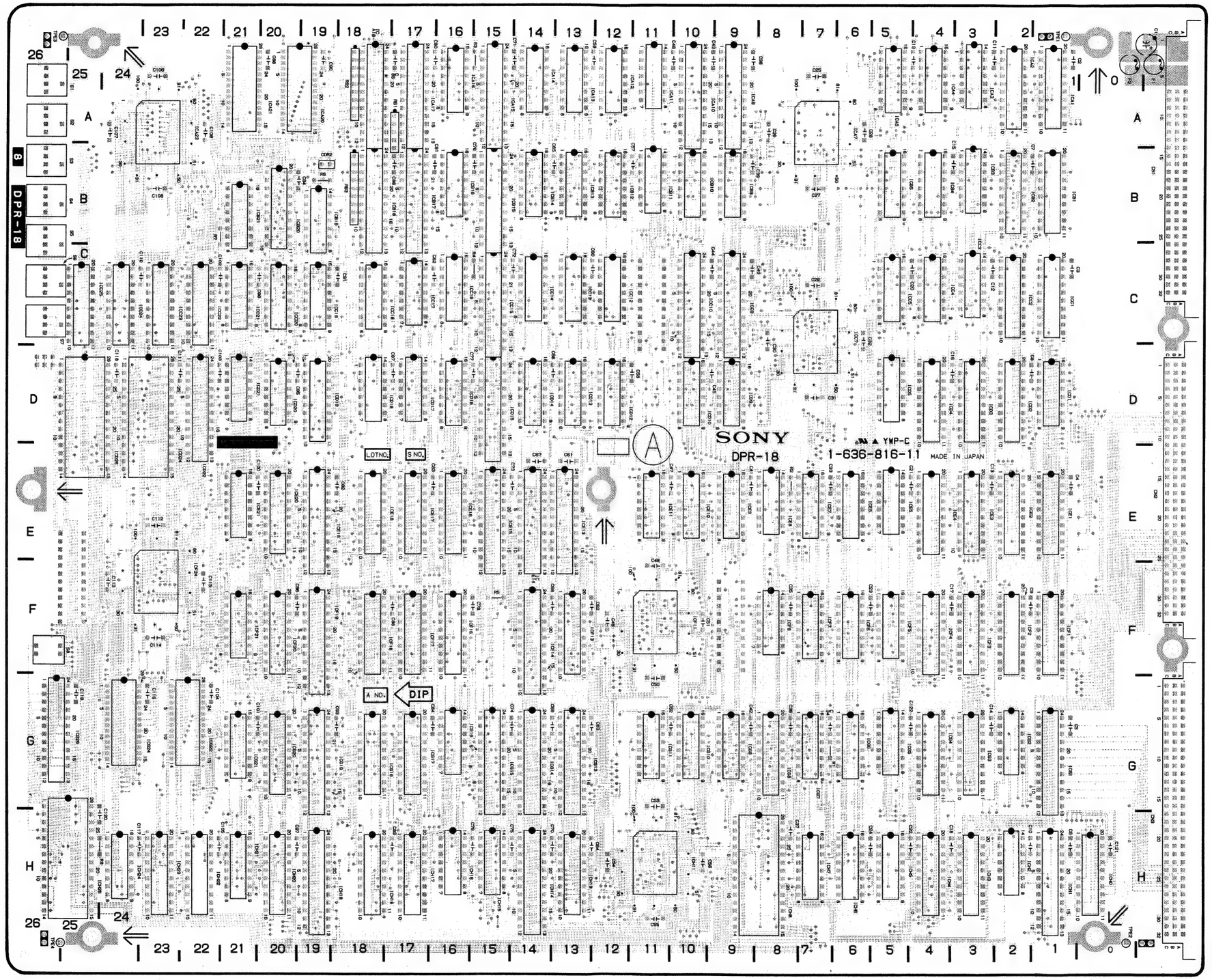

DPR-18 -A SIDE-
1-636-816-11
DME-5000(J,UC)

MEM-41;3 FIELD VIDEO MEMORY AND INTERPOLATOR

MEM-41

CN1	B-1
CN2	E-1
CN3	H-1
COR1	J-5
COR2	G-12
COR3	H-12
DL1	H-13
E1	A-2
E2	J-1
E3	A-20
E4	J-20
F1	A-1
F2	A-1
S1	J-20

NOTE:
IC NO.on this board show its address.

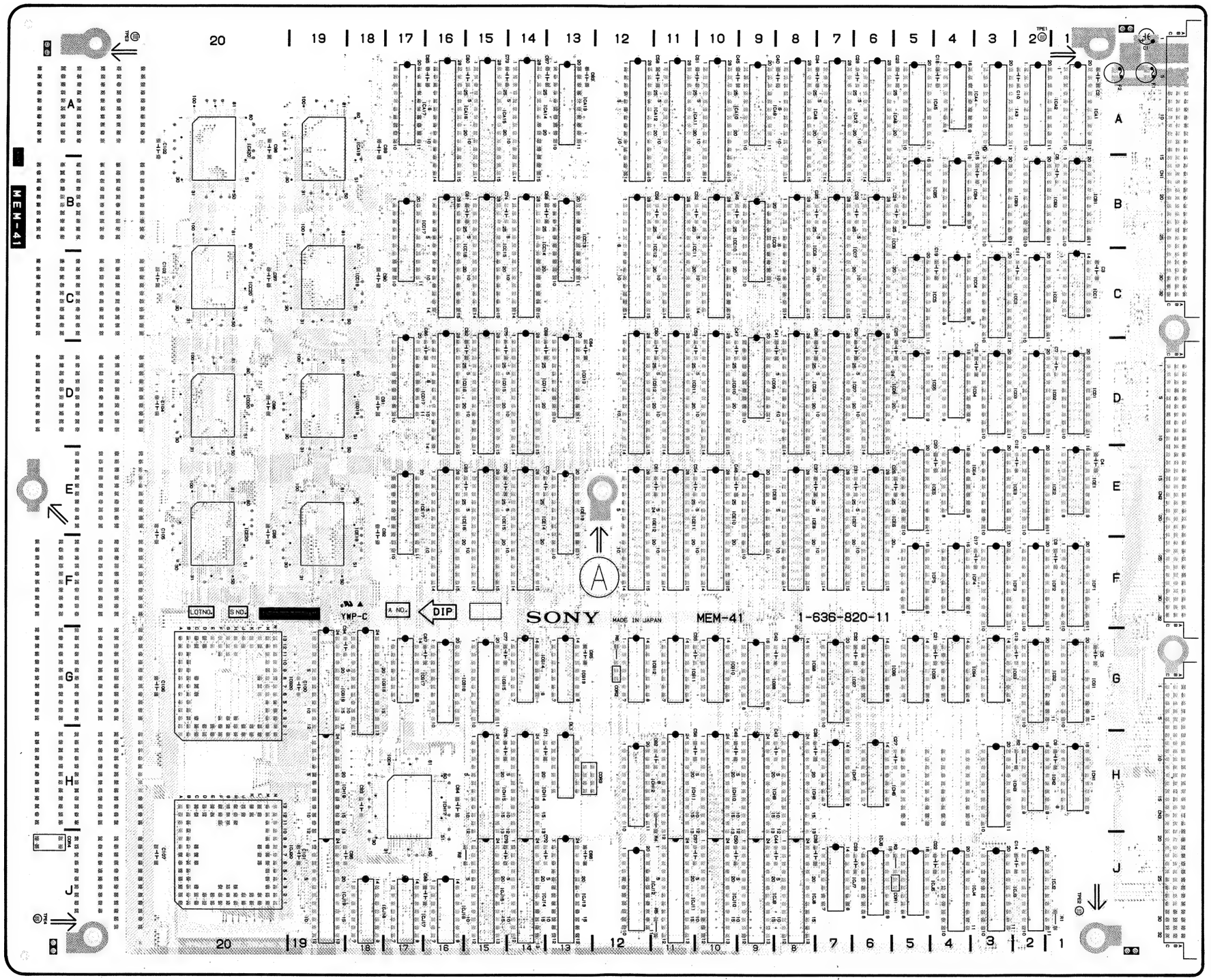

MEM-41 -A SIDE-
1-636-820-11
DME-5000(J,UC)

CN-456;POWER SUPPLY CONNECTOR BOARD
CN-462;BNC CONNECTOR BOARD

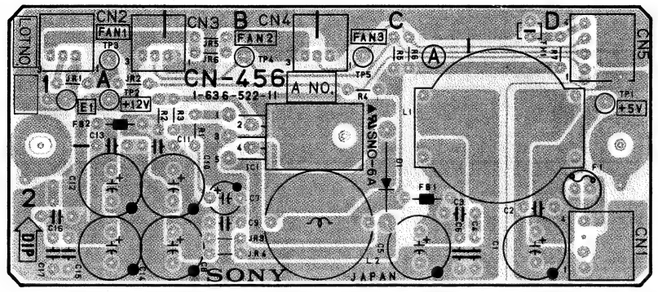

CN-456 -A SIDE-
1-636-522-11
DME-5000(J,UC)

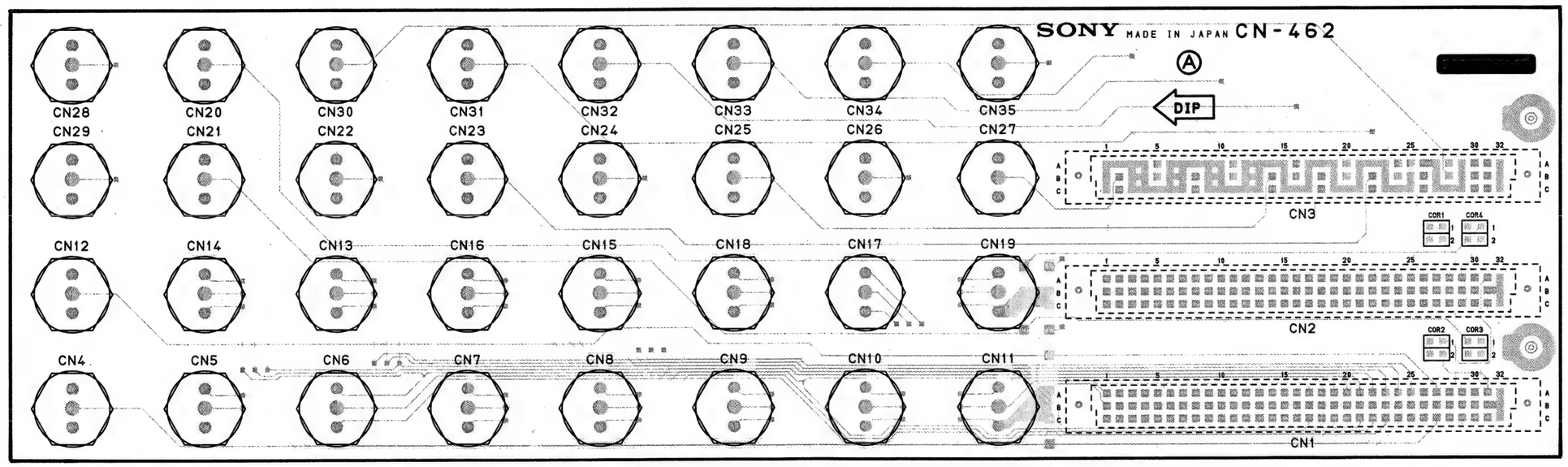

CN-462 -A SIDE-
1-636-825-11
DME-5000(J,UC)

CN-463;D SUB CONNECTOR BOARD

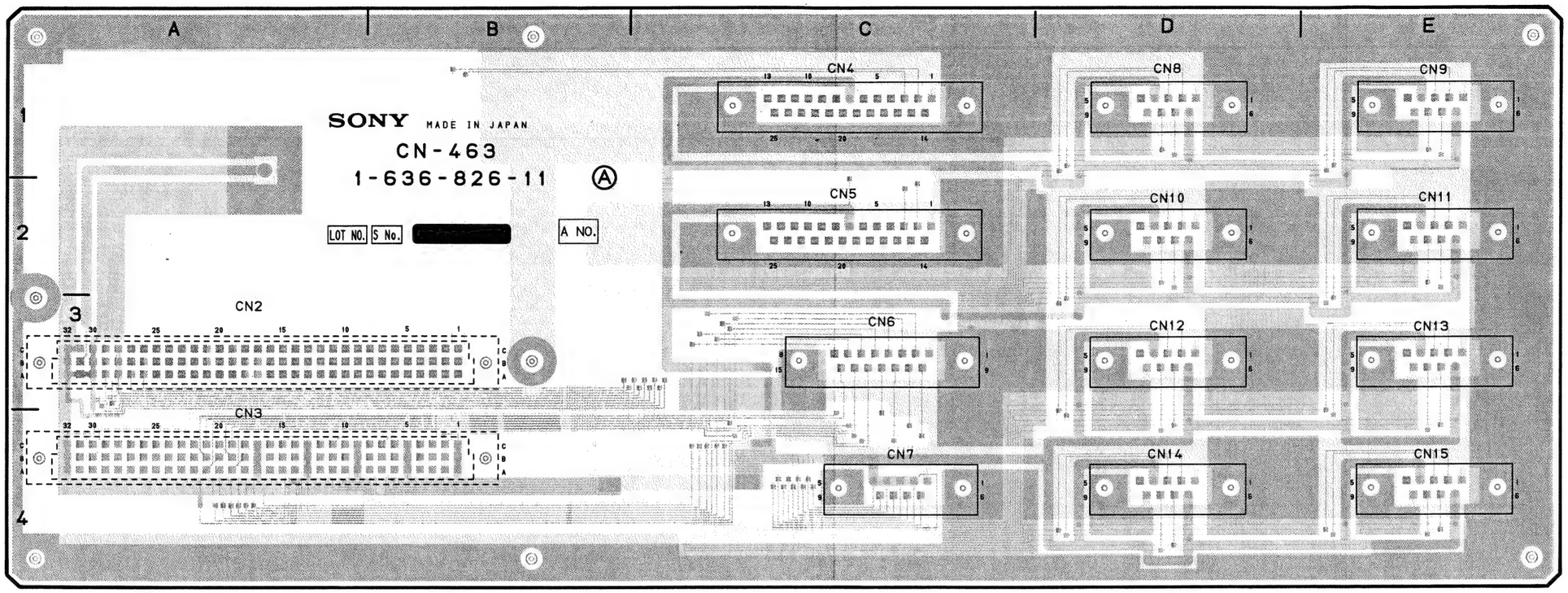

CN-463 -A SIDE-
1-636-826-11
DME-5000(J,UC)

MB-305;MOTHER BOARD

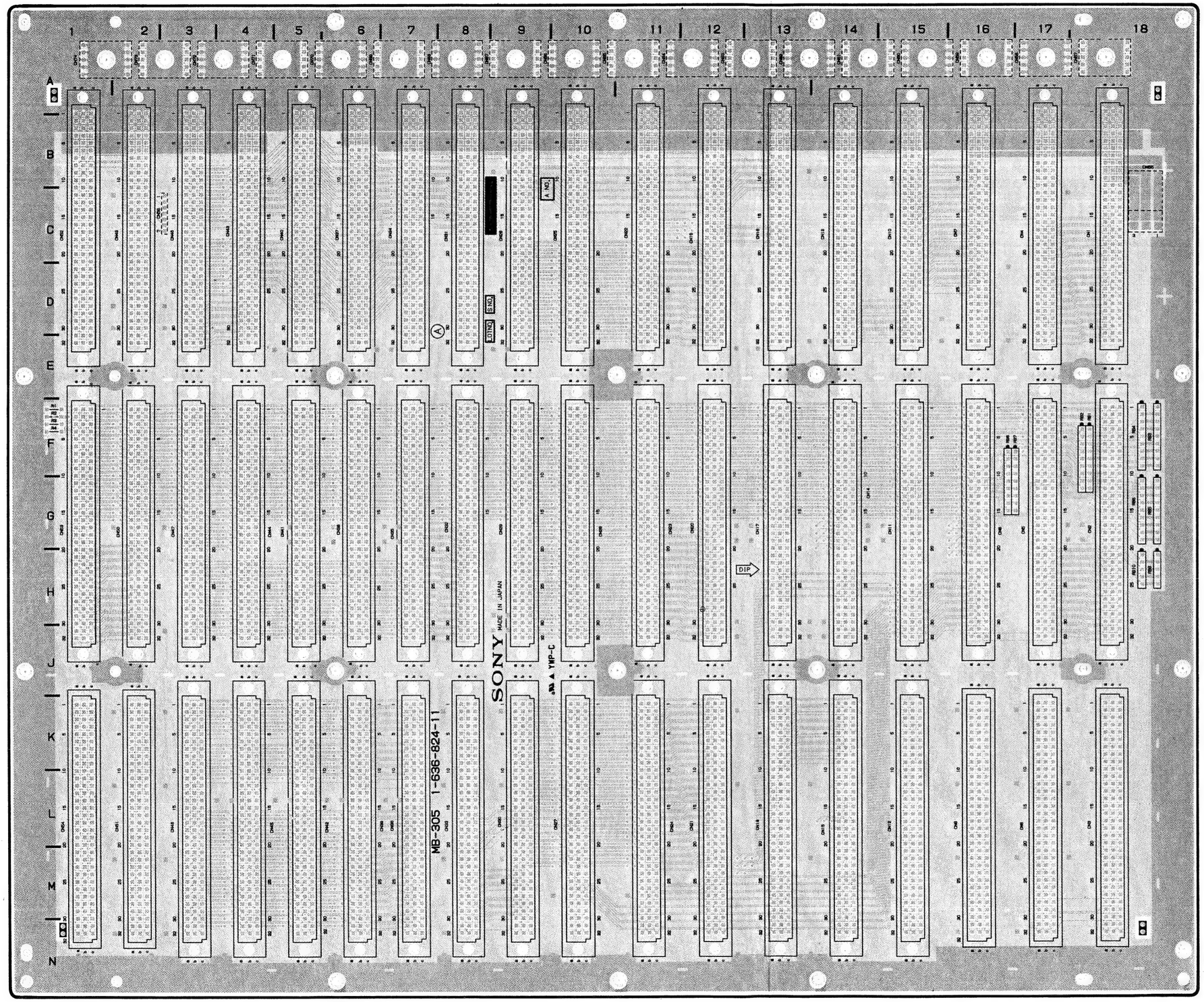

MB-305 -A SIDE-

1-636-824-11
DME-5000(J,UC)

EX-270;EXTENSION BOARD

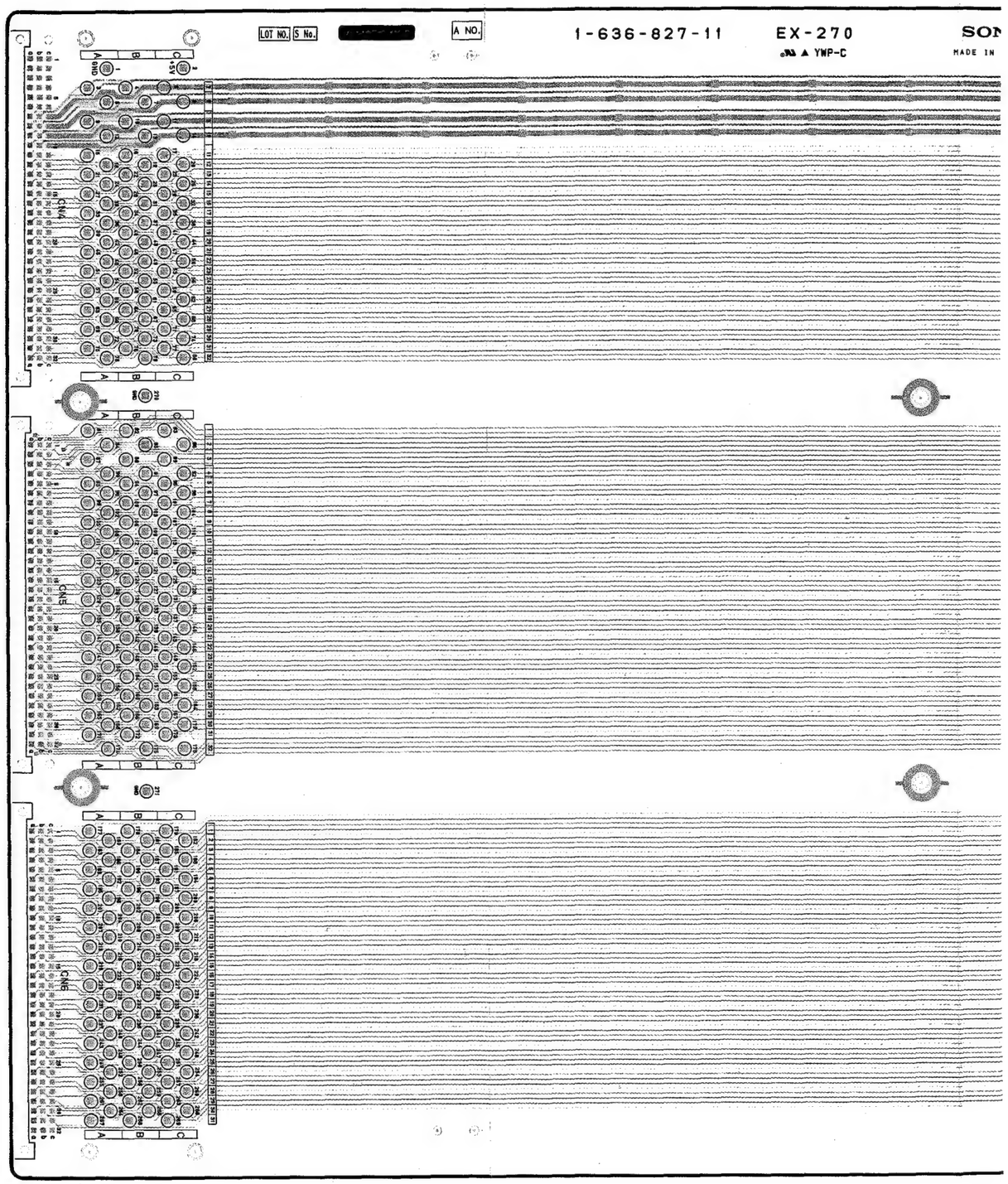

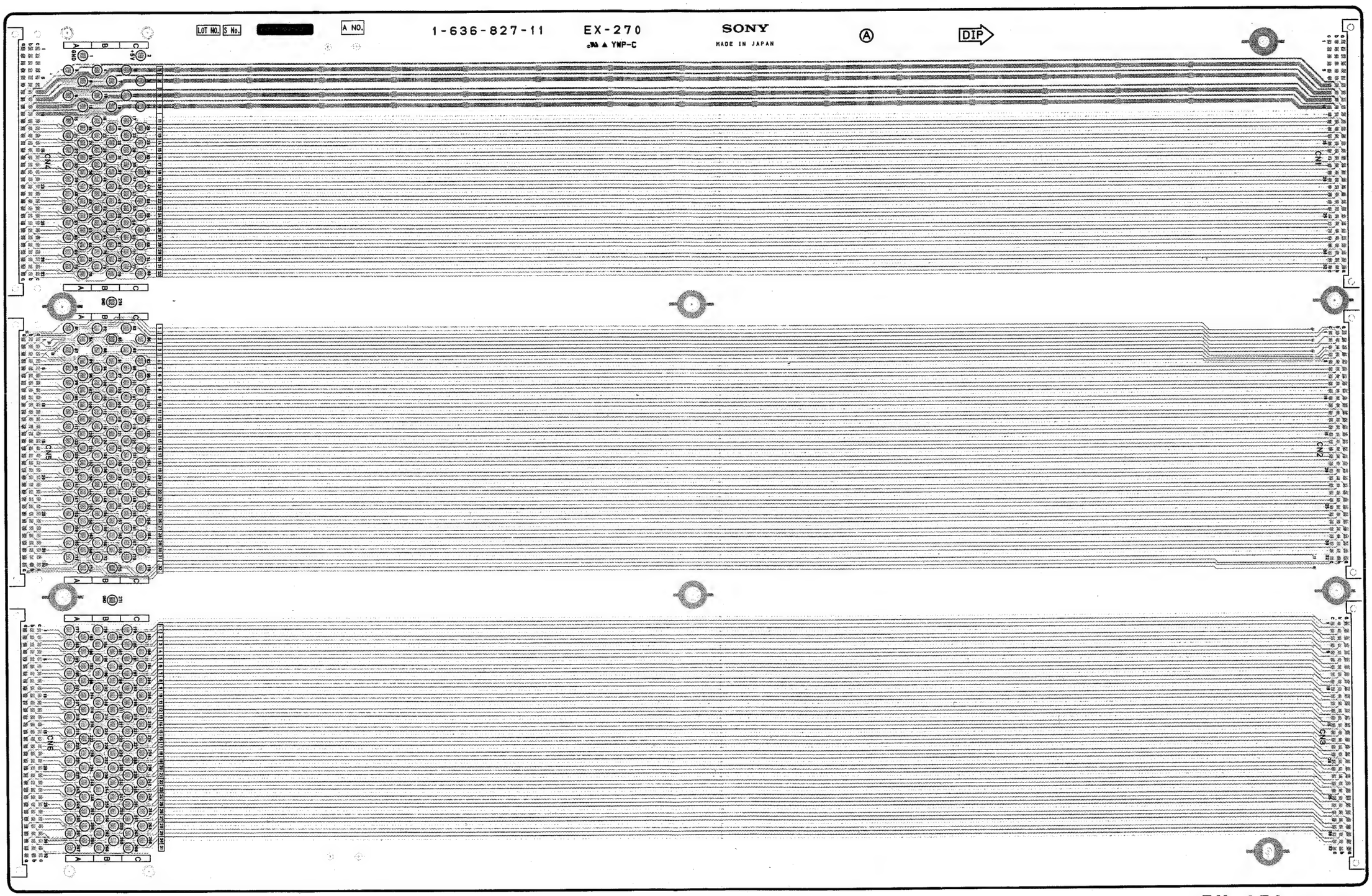

EX-270 -A SIDE-

1-636-827-11
DME-5000(J,UC)

SECTION 10
SPARE PARTS

10-1. PARTS INFORMATION

(1) The shaded and ⚠ marked components are critical to safety.
Replace only with same components as specified.

(2) Replacement Parts supplied from the Sony Parts Center will sometimes have a different shape from the original parts. This is due to improved parts and/or engineering changes or standardization of genuine parts.
This manual's exploded views and electrical spare parts list indicate the part numbers of the standardized genuine parts at the present.
Regarding engineering part changes by the engineering department, refer to Sony service bulletins and service manual supplements.

(3) The parts marked with "s" in the SP column of the exploded views and electrical spare parts lists are normally stocked for replacement purposes. The parts marked with "o" in the SP column are not normally required for routine service work. Orders for parts marked with "o" will be processed, but allow for additional delivery time.

(4) Items with no part number and/or no description are not stocked because they are seldom required for routine service.

(5) All capacitors are in micro farads unless otherwise specified.
All inductors are in micro henries unless otherwise specified.
All resistors are in ohms.

10-2. EXPLODED VIEW

10-2-1. Chassis (1) P10-3
10-2-2. Chassis (2) P10-5
10-2-3. Power Unit P10-7
10-2-4. Rear Panel P10-9

10-2-1. Chassis (1)

No.	Part No.	SP	Description
1	A-6279-484-A	o	HANDLE ASSY, DOOR
2	X-2068-004-0	s	TERMINAL ASSY
3	X-2127-216-1	o	LOCK ASSY, DOOR
4	X-3165-067-1	o	STOPPER ASSY
5	X-3165-221-1	o	ANGLE ASSY (10U), RACK
6	X-3165-447-1	o	PANEL ASSY, FRONT
7	2-068-008-00	s	WASHER
8	2-139-192-01	o	FRAME, INDICATOR WINDOW
9	2-139-193-01	o	WINDOW, INDICATOR
10	2-249-353-00	o	COVER, LAMP
11	3-166-131-01	o	TABLE (H), STAY
12	3-166-133-01	o	HINGE (H)
13	3-166-134-01	o	LINE, SHILED
14	3-166-135-01	o	HINGE (F)
15	3-166-136-01	o	PIN, HINGE
16	3-166-157-01	o	BRACKET, SHIELD LINE
17	3-166-203-01	o	FILTER
18	3-166-223-01	o	PLATE, SIDE, LEFT, PANEL
19	3-166-229-01	o	PLATE, TOP
20	3-167-453-01	o	HANDLE
21	3-642-656-01	s	FOOT
22	4-334-513-00	s	NUT, NYLON

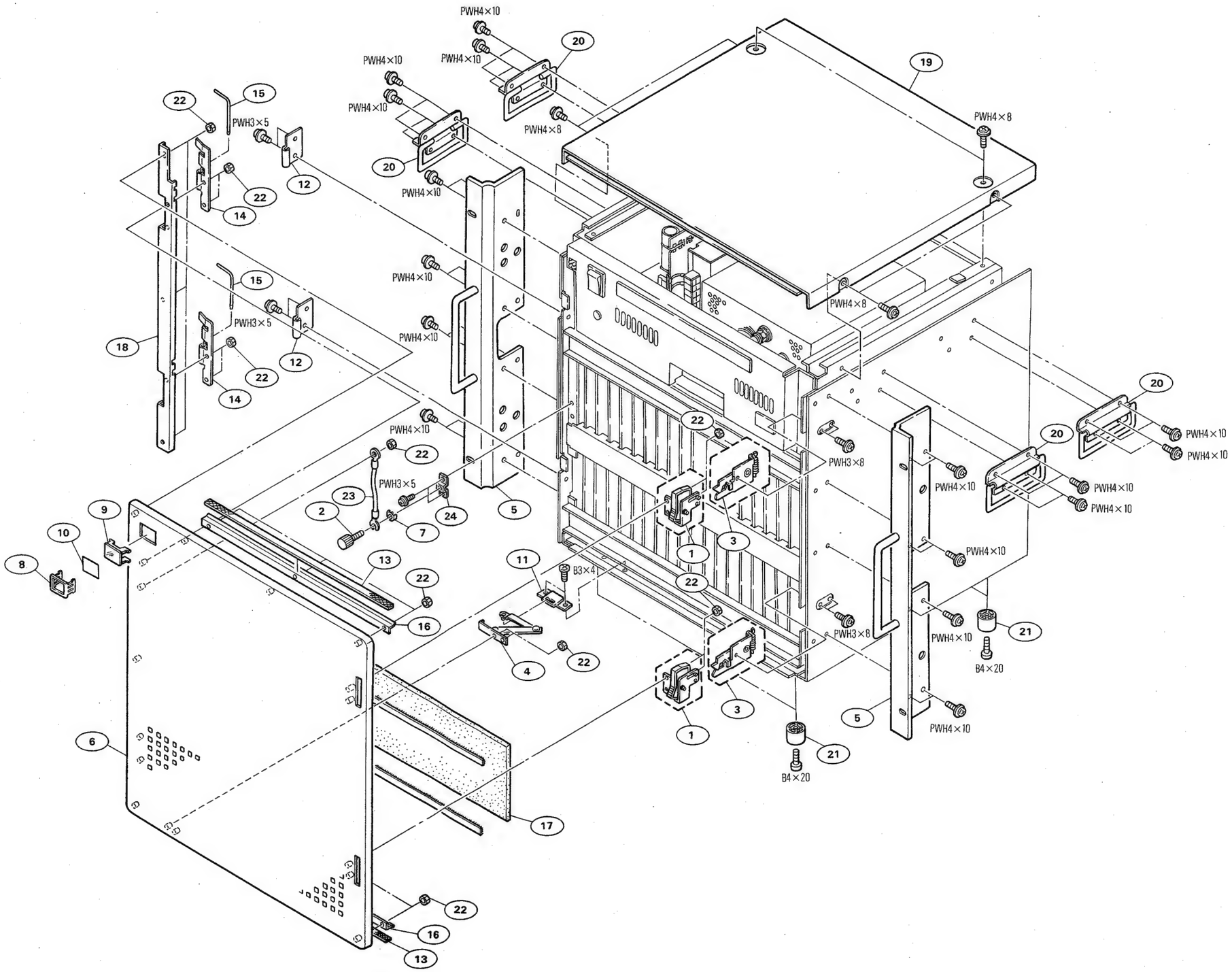

10-2-2. Chassis (2)

No.	Part No.	SP	Description
101	A-6259-454-A	o	MOUNTED CIRCIUT BOARD, CPU-82
102	A-6259-455-A	o	MOUNTED CIRCIUT BOARD, ALU-11
103	A-6259-456-A	o	MOUNTED CIRCIUT BOARD, DPR-18
104	A-6259-457-A	o	MOUNTED CIRCIUT BOARD, DPR-17
105	A-6259-458-A	o	MOUNTED CIRCIUT BOARD, MEM-41
106	A-6259-459-A	o	MOUNTED CIRCIUT BOARD, DLP-9
107	A-6259-460-A	o	MOUNTED CIRCIUT BOARD, DPR-15
108	A-6259-461-A	o	MOUNTED CIRCIUT BOARD, DPR-16
109	X-3165-222-1	o	RETAINER ASSY, PC BOARD
110	X-3165-223-1	o	PLATE ASSY, SHIELD
111	2-249-250-00	s	CLIP (SMALL), CANOE
112	3-166-132-01	o	SPACER (G)
113	3-166-184-01	o	LEVER, PC BOARD
114	3-166-191-01	o	HOLDER, PC BOARD
115	3-166-193-01	o	BRACKET (L), MOTHER BOARD
116	3-166-194-01	o	BRACKET (R), MOTHER BOARD
117	3-166-195-01	o	RETAINER, RAIL TABLE
118	3-166-196-02	o	RETAINER, EJECTOR
119	3-166-200-01	o	BRACKET, FCC
120	3-166-213-01	o	REINFORCEMENT
121	3-166-214-01	o	SHEET, INDICATION
122	3-166-230-02	o	TABLE, RAIL
123	3-166-230-12	o	TABLE, RAIL
124	3-166-231-01	o	PLATE, BOTTOM
125	3-166-232-01	o	PLATE (R), SIDE
126	3-166-233-01	o	PLATE (L), SIDE
127	3-167-575-11	o	TABLE, SLIDE, POWER
128	3-724-333-01	o	GUIDE (S), CASSETTE

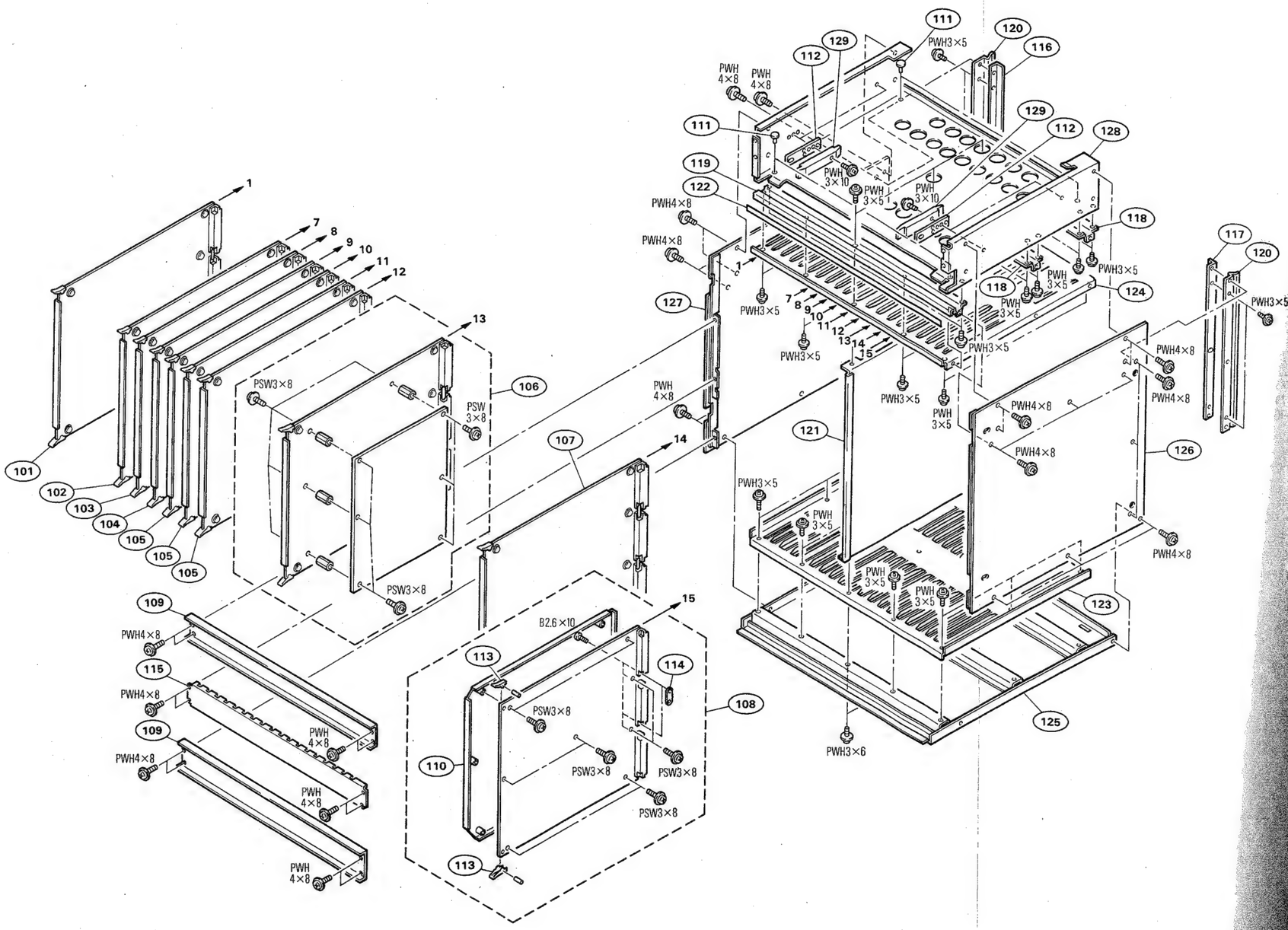

10-2-3. Power Unit

No.	Part No.	SP	Description
201	⚠A-6263-090-A	o	MOUNTED CIRCIUT BOARD, CN-456
202	⚠1-413-477-12	s	REGULATOR, SWITCHING (EWS50-5)
203	⚠1-413-569-11	s	REGULATOR, SWITCHING
204	⚠1-413-594-11	s	SWITCHING REGULATOR
205	⚠1-424-136-11	s	FILTER, NOISE
206	⚠1-540-178-11	s	INLET, AC (GL-2100C-30)
207	1-541-329-31	s	FAN, DC (WITH ALARM)
208	⚠1-572-345-11	s	SWITC, SEESAW (AC POWER)
209	⚠1-576-036-11	s	BREAKER, CIRCUIT
210	1-631-489-11	o	PC BOARD, LE-76
211	2-249-250-00	s	CLIP (SMALL), CANOE
212	2-990-241-01	o	HOLDER (A), PLUG
213	3-166-137-01	o	COVER, ADJUSTMENT WINDOW
214	3-166-160-01	o	COVER, HANDLE
215	3-166-188-02	o	COVER (2), ADJUSTMENT WINDOW
216	3-166-189-02	o	BRACKET, BREAKER
217	3-166-190-11	s	NUT, PLATE
218	3-166-206-02	o	BRACKET, AC INLET
219	3-166-207-01	o	BRACKET, AC SW
220	3-166-224-02	o	PANEL, FRONT, POWER
221	3-166-225-01	o	PANEL, REAR, POWER
222	3-167-572-01	o	BRACKET (2), FILTER
223	3-167-573-01	o	BRACKET (1), FILTER
224	3-167-574-01	o	CHASSIS, POWER
225	3-674-390-00	o	HOLDER (B), LED

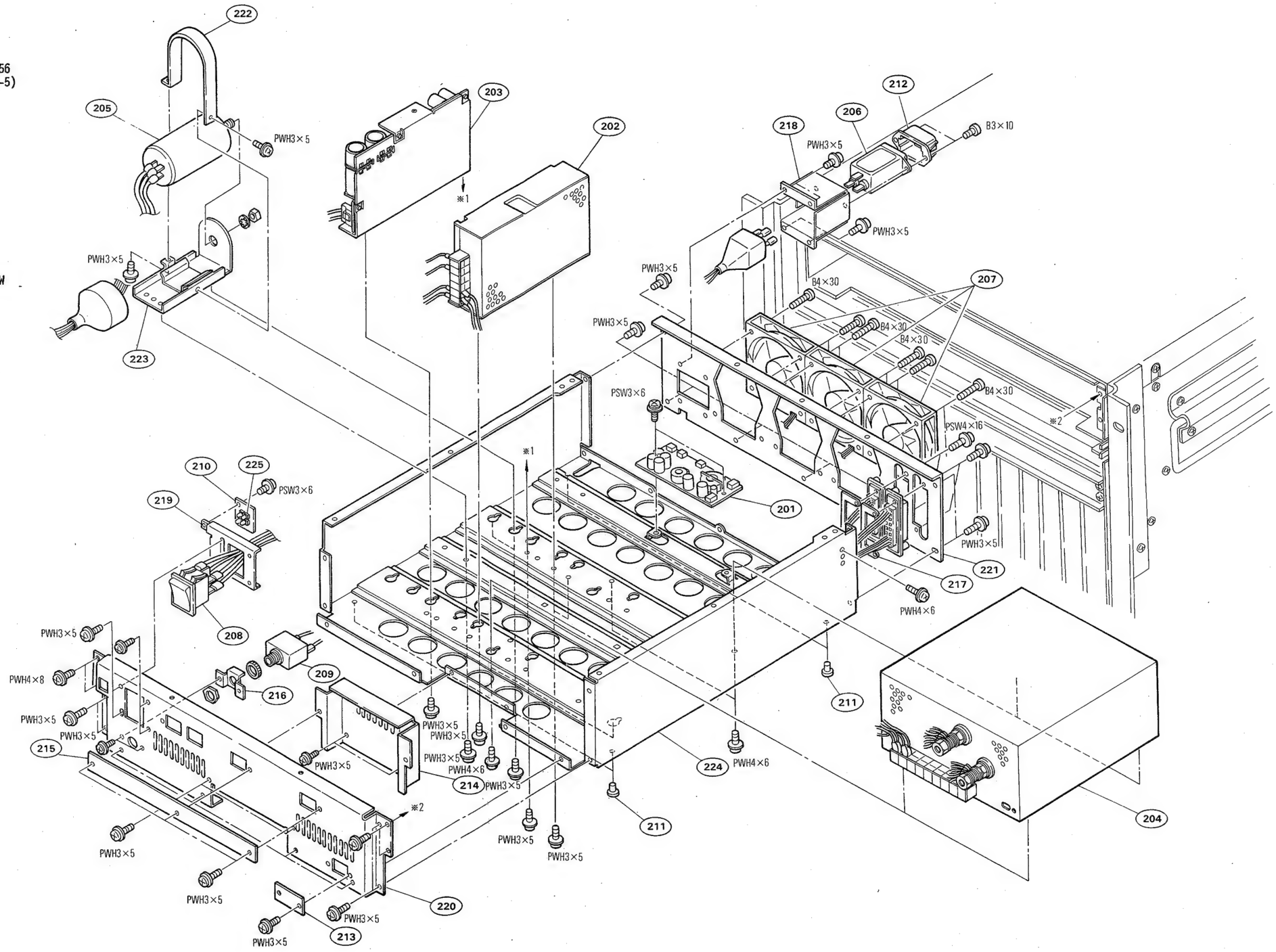

10-2-4. Rear Panel

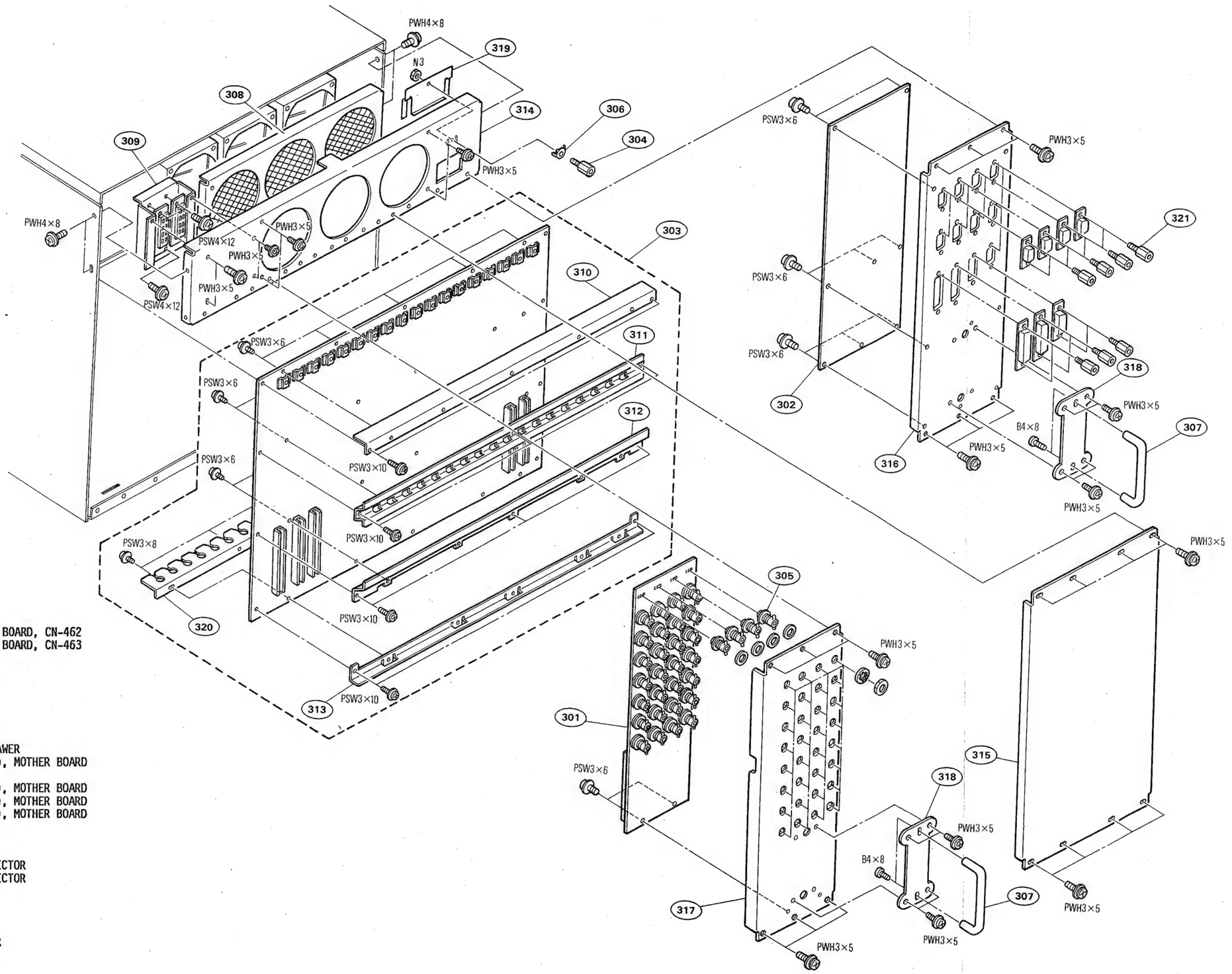

No.	Part No.	SP	Description
301	A-6259-452-A	o	MOUNTED CIRCIUT BOARD, CN-462
302	A-6259-453-A	o	MOUNTED CIRCIUT BOARD, CN-463
303	A-6279-734-A	o	MB-305 ASSY
304	X-2068-004-1	s	TERMINAL ASSY
305	1-580-356-11	s	CONNECTOR, BNC
306	2-068-008-00	s	WASHER
307	2-270-616-00	o	HANDLE
308	3-166-197-01	o	VENTILATOR
309	3-166-199-02	o	BRACKET, CN, DRAWER
310	3-166-208-02	o	REINFORCEMENT(1), MOTHER BOARD
311	3-166-209-01	o	REINFORCEMENT(2), MOTHER BOARD
312	3-166-210-02	o	REINFORCEMENT(3), MOTHER BOARD
313	3-166-211-01	o	REINFORCEMENT(4), MOTHER BOARD
314	3-166-212-01	o	PANEL, REAR
315	3-166-378-02	o	PANEL, BLANK
316	3-166-379-02	o	PANEL (1), CONNECTOR
317	3-166-380-02	o	PANEL (2), CONNECTOR
318	3-167-576-01	o	BRACKET, HANDLE
319	3-168-627-01	s	SPRING, FCC
320	3-168-628-01	o	GUIDE, PCB
321	3-673-910-21	o	SCREW, CONNECTOR

10-3. ELECTRICAL PARTS LIST

CAPACITOR, CERAMIC, STACKED

Part No.	SP	Description
1-161-494-00	s	CAP, CERAMIC 0.22 25V
1-161-898-11	s	CAP, CERAMIC 0.47 50V
1-164-208-21	s	CAP, CERAMIC 0.1 99% 50V

RESISTOR, METAL

Part No.	SP	Description
1-215-398-00	s	RES, METAL 110 1% 1/6W
1-215-421-00	s	RES, METAL 1.0k 1% 1/6W
1-215-429-00	s	RES, METAL 2.2k 1% 1/6W
1-215-437-00	s	RES, METAL 4.7k 1% 1/6W
1-215-438-00	s	RES, METAL 5.1k 1% 1/6W
1-215-445-00	s	RES, METAL 10k 1% 1/6W

ALU-11 BOARD

Ref. No. or Q'ty	Part No.	SP	Description
1pc	A-6259-455-A	o	MOUNTED CIRCIUT BOARD, ALU-11
3pcs	1-526-659-00	s	SOCKET, IC (DP) 28P
3pcs	1-526-816-21	o	SOCKET, IC (DP) 24P
2pcs	3-166-184-01	o	LEVER, PC BOARD
6pcs	7-621-773-87	s	SCREW +B 2.6X10
2pcs	7-622-207-05	s	N 2.6, TYPE 2
2pcs	7-626-320-11	s	PIN, SPRING 3X8
8pcs	7-682-948-01	s	SCREW +PSW 3X8
C1	1-124-589-11	s	ELECT 47uF 20% 16V
CN1	1-506-748-11	s	CONNECTOR, DIN 96P, MALE
CN2	1-506-748-11	s	CONNECTOR, DIN 96P, MALE
CN3	1-506-748-11	s	CONNECTOR, DIN 96P, MALE
F1	1-576-031-11	s	FUSE, MICRO
F2	1-576-031-11	s	FUSE, MICRO
ICA1	8-759-906-78	s	IC 74F399PC
ICA2	8-759-906-78	s	IC 74F399PC
ICA3	8-759-906-78	s	IC 74F399PC
ICA5	8-759-706-53	s	IC TMS27C256-ALU11A5V1
ICA6	8-759-706-54	s	IC TMS27C256-ALU11A6V1
ICA8	8-759-706-55	s	IC TMS27C256-ALU11A8V1
ICA9	8-759-904-87	s	IC 74F374PC
ICA10	8-759-904-87	s	IC 74F374PC
ICA11	8-759-906-76	s	IC 74F283PC
ICA12	8-759-904-87	s	IC 74F374PC
ICA13	8-759-906-78	s	IC 74F399PC
ICA14	8-759-906-78	s	IC 74F399PC
ICA15	8-759-906-78	s	IC 74F399PC
ICA16	8-759-906-78	s	IC 74F399PC
ICA17	8-759-903-92	s	IC SN74LS682N
ICA18	8-759-903-92	s	IC SN74LS682N
ICA19	8-759-903-92	s	IC SN74LS682N
ICA20	8-759-904-87	s	IC 74F374PC
ICA21	8-759-917-48	s	IC 74F64PC
ICA22	8-759-904-87	s	IC 74F374PC
ICA26	8-759-904-88	s	IC 74F534PC
ICA27	8-759-904-87	s	IC 74F374PC
ICA28	8-759-908-69	s	IC 74F350PC
ICA29	8-759-900-68	s	IC SN74ALS30AN
ICA30	8-759-908-69	s	IC 74F350PC
ICB1	8-759-916-66	s	IC SN74HCT240N
ICB2	8-759-916-96	s	IC SN74HC374N
ICB3	8-759-906-78	s	IC 74F399PC
ICB9	8-759-904-87	s	IC 74F374PC
ICB10	8-759-904-80	s	IC 74F04PC
ICB11	8-759-906-76	s	IC 74F283PC
ICB12	8-759-900-68	s	IC SN74ALS30AN
ICB13	8-759-904-87	s	IC 74F374PC
ICB15	8-759-990-97	s	IC CXD8156Q
ICB17	8-759-917-89	s	IC 74F398PC
ICB18	8-759-906-78	s	IC 74F399PC
ICB19	8-759-906-78	s	IC 74F399PC
ICB20	8-759-904-87	s	IC 74F374PC
ICB21	8-759-918-33	s	IC CX20160
ICB22	8-759-904-87	s	IC 74F374PC
ICB24	8-759-990-97	s	IC CXD8156Q
ICB26	8-759-904-88	s	IC 74F534PC
ICB27	8-759-904-87	s	IC 74F374PC

Parts that are not listed in the "reference number order list" are shown in the "General Purpose Electrical Parts List".

(ALU-11 BOARD)

Ref. No. or Q'ty	Part No.	SP	Description
ICB28	8-759-908-69	s	IC 74F350PC
ICB29	8-759-908-69	s	IC 74F350PC
ICB30	8-759-906-76	s	IC 74F283PC
ICC1	8-759-904-77	s	IC AM26LS32ACN
ICC2	8-759-906-78	s	IC 74F399PC
ICC3	8-759-906-78	s	IC 74F399PC
ICC4	8-759-906-78	s	IC 74F399PC
ICC5	8-759-918-33	s	IC CX20160
ICC6	8-759-918-33	s	IC CX20160
ICC7	8-759-904-87	s	IC 74F374PC
ICC8	8-759-904-87	s	IC 74F374PC
ICC9	8-759-916-96	s	IC SN74HC374N
ICC10	8-759-904-87	s	IC 74F374PC
ICC11	8-759-904-87	s	IC 74F374PC
ICC12	8-759-904-87	s	IC 74F374PC
ICC13	8-759-938-44	s	IC SN74ALS688N
ICC14	8-759-904-87	s	IC 74F374PC
ICC15	8-759-942-67	s	IC L29C520PC
ICC16	8-759-942-67	s	IC L29C520PC
ICC17	8-759-917-89	s	IC 74F398PC
ICC18	8-759-906-78	s	IC 74F399PC
ICC19	8-759-906-78	s	IC 74F399PC
ICC20	8-759-904-87	s	IC 74F374PC
ICC21	8-759-906-76	s	IC 74F283PC
ICC22	8-759-906-76	s	IC 74F283PC
ICC23	8-759-908-69	s	IC 74F350PC
ICC24	8-759-908-69	s	IC 74F350PC
ICC25	8-759-906-78	s	IC 74F399PC
ICC26	8-759-906-78	s	IC 74F399PC
ICC27	8-759-917-54	s	IC 74F148PC
ICC28	8-759-908-69	s	IC 74F350PC
ICC29	8-759-908-69	s	IC 74F350PC
ICC30	8-759-906-76	s	IC 74F283PC
ICD1	8-759-916-66	s	IC SN74HCT240N
ICD2	8-759-938-44	s	IC SN74ALS688N
ICD3	8-759-913-63	s	IC SN74ALS374N
ICD4	8-759-904-87	s	IC 74F374PC
ICD5	8-759-918-33	s	IC CX20160
ICD6	8-759-900-68	s	IC SN74ALS30AN
ICD7	8-759-915-41	s	IC 74F02PC
ICD8	8-759-001-87	s	IC 74F20PC
ICD9	8-759-915-93	s	IC 74F163APC
ICD10	8-759-904-80	s	IC 74F04PC
ICD11	8-759-916-14	s	IC SN74HC04N
ICD12	8-759-906-78	s	IC 74F399PC
ICD13	8-759-906-76	s	IC 74F283PC
ICD14	8-759-904-87	s	IC 74F374PC
ICD17	8-759-906-78	s	IC 74F399PC
ICD18	8-759-906-78	s	IC 74F399PC
ICD19	8-759-906-78	s	IC 74F399PC
ICD20	8-759-942-67	s	IC L29C520PC
ICD21	8-759-942-67	s	IC L29C520PC
ICD22	8-759-904-80	s	IC 74F04PC
ICD23	8-759-908-69	s	IC 74F350PC
ICD24	8-759-908-69	s	IC 74F350PC
ICD25	8-759-906-78	s	IC 74F399PC
ICD26	8-759-906-78	s	IC 74F399PC
ICD27	8-759-917-54	s	IC 74F148PC

(ALU-11 BOARD)

Ref. No. or Q'ty	Part No.	SP	Description
ICD28	8-759-908-69	s	IC 74F350PC
ICD29	8-759-908-69	s	IC 74F350PC
ICD30	8-759-904-87	s	IC 74F374PC
ICE1	8-759-902-44	s	IC SN74LS244N
ICE2	8-759-921-69	s	IC SN74HC688N
ICE3	8-759-913-63	s	IC SN74ALS374N
ICE4	8-759-904-80	s	IC 74F04PC
ICE5	8-759-904-80	s	IC 74F04PC
ICE6	8-759-904-80	s	IC 74F04PC
ICE7	8-759-904-82	s	IC 74F10PC
ICE8	8-759-917-48	s	IC 74F64PC
ICE9	8-759-917-58	s	IC 74F164PC
ICE10	8-759-917-58	s	IC 74F164PC
ICE11	8-759-904-81	s	IC 74F08PC
ICE12	8-759-906-78	s	IC 74F399PC
ICE13	8-759-906-76	s	IC 74F283PC
ICE14	8-759-904-87	s	IC 74F374PC
ICE15	8-759-942-67	s	IC L29C520PC
ICE16	8-759-942-67	s	IC L29C520PC
ICE17	8-759-906-78	s	IC 74F399PC
ICE18	8-759-906-78	s	IC 74F399PC
ICE19	8-759-906-78	s	IC 74F399PC
ICE20	8-759-942-67	s	IC L29C520PC
ICE21	8-759-942-67	s	IC L29C520PC
ICE22	8-759-906-66	s	IC 74F86PC
ICE23	8-759-908-69	s	IC 74F350PC
ICE24	8-759-908-69	s	IC 74F350PC
ICE25	8-759-908-69	s	IC 74F350PC
ICE26	8-759-908-69	s	IC 74F350PC
ICE27	8-759-916-02	s	IC SN74ALS158N
ICE28	8-759-906-76	s	IC 74F283PC
ICE29	8-759-904-87	s	IC 74F374PC
ICE30	8-759-906-78	s	IC 74F399PC
ICF1	8-759-902-44	s	IC SN74LS244N
ICF2	8-759-921-69	s	IC SN74HC688N
ICF3	8-759-918-33	s	IC CX20160
ICF4	8-759-917-43	s	IC SN74HC138N
ICF5	8-759-906-66	s	IC 74F86PC
ICF6	8-759-918-33	s	IC CX20160
ICF7	8-759-910-01	s	IC CX23024
ICF8	8-759-906-66	s	IC 74F86PC
ICF9	8-759-915-93	s	IC 74F163APC
ICF10	8-759-915-93	s	IC 74F163APC
ICF11	8-759-904-87	s	IC 74F374PC
ICF12	8-759-904-79	s	IC 74F00PC
ICF13	8-759-904-80	s	IC 74F04PC
ICF14	8-759-917-48	s	IC 74F64PC
ICF15	8-759-942-67	s	IC L29C520PC
ICF16	8-759-942-67	s	IC L29C520PC
ICF17	8-759-904-82	s	IC 74F10PC
ICF18	8-759-904-87	s	IC 74F374PC
ICF19	8-759-705-91	s	IC WS57C291B-ALU11F19V1
ICF20	8-759-942-67	s	IC L29C520PC
ICF21	8-759-942-67	s	IC L29C520PC
ICF22	8-759-904-87	s	IC 74F374PC
ICF23	8-759-904-87	s	IC 74F374PC
ICF24	8-759-938-44	s	IC SN74ALS688N
ICF25	8-759-706-56	s	IC TMS27C256-ALU11F25V1

(ALU-11 BOARD)

Ref. No. or Q'ty	Part No.	SP	Description
ICF27	8-759-706-57	s	IC TMS27C256-ALU11F27V1
ICF28	8-759-705-90	s	IC WS57C291B-ALU11F28V1
ICF29	8-759-918-33	s	IC CX20160
ICF30	8-759-906-78	s	IC 74F399PC
ICG1	8-759-913-63	s	IC SN74ALS374N
ICG2	8-759-902-44	s	IC SN74LS244N
ICG3	8-759-918-33	s	IC CX20160
ICG4	8-759-906-78	s	IC 74F399PC
ICG5	8-759-906-78	s	IC 74F399PC
ICG7	8-759-990-97	s	IC CXD8156Q
ICG10	8-759-990-97	s	IC CXD8156Q
ICG12	8-759-990-97	s	IC CXD8156Q
ICG14	8-759-990-97	s	IC CXD8156Q
ICG16	8-759-904-80	s	IC 74F04PC
ICG17	8-759-908-69	s	IC 74F350PC
ICG18	8-759-908-69	s	IC 74F350PC
ICG22	8-759-906-78	s	IC 74F399PC
ICG23	8-759-906-76	s	IC 74F283PC
ICG24	8-759-904-87	s	IC 74F374PC
ICG29	8-759-918-33	s	IC CX20160
ICG30	8-759-904-87	s	IC 74F374PC
ICH1	8-759-913-63	s	IC SN74ALS374N
ICH2	8-759-906-78	s	IC 74F399PC
ICH3	8-759-906-78	s	IC 74F399PC
ICH4	8-759-906-78	s	IC 74F399PC
ICH5	8-759-906-78	s	IC 74F399PC
ICH16	8-759-904-81	s	IC 74F08PC
ICH17	8-759-908-69	s	IC 74F350PC
ICH18	8-759-908-69	s	IC 74F350PC
ICH20	8-759-990-97	s	IC CXD8156Q
ICH22	8-759-906-78	s	IC 74F399PC
ICH23	8-759-906-76	s	IC 74F283PC
ICH24	8-759-916-97	s	IC SN74HCT374N
ICH25	8-759-916-97	s	IC SN74HCT374N
ICH26	8-759-916-97	s	IC SN74HCT374N
ICH27	8-759-904-87	s	IC 74F374PC
ICH28	8-759-904-87	s	IC 74F374PC
ICH29	8-759-938-44	s	IC SN74ALS688N
ICH30	8-759-904-87	s	IC 74F374PC
ICJ1	8-759-918-33	s	IC CX20160
ICJ2	8-759-906-78	s	IC 74F399PC
ICJ3	8-759-906-78	s	IC 74F399PC
ICJ4	8-759-706-30	s	IC AT27HC642-ALU11J4V1
ICJ5	8-759-904-82	s	IC 74F10PC
ICJ6	8-759-910-01	s	IC CX23024
ICJ7	8-759-910-01	s	IC CX23024
ICJ8	8-759-910-01	s	IC CX23024
ICJ9	8-759-910-01	s	IC CX23024
ICJ10	8-759-910-01	s	IC CX23024
ICJ11	8-759-910-01	s	IC CX23024
ICJ12	8-759-910-01	s	IC CX23024
ICJ13	8-759-910-01	s	IC CX23024
ICJ14	8-759-904-87	s	IC 74F374PC
ICJ15	8-759-904-87	s	IC 74F374PC
ICJ16	8-759-904-87	s	IC 74F374PC
ICJ17	8-759-908-69	s	IC 74F350PC
ICJ18	8-759-908-69	s	IC 74F350PC
ICJ22	8-759-906-78	s	IC 74F399PC

Parts that are not listed in the "reference number order list" are shown in the "General Purpose Electrical Parts List".

(ALU-11 BOARD)

Ref. No. or Q'ty	Part No.	SP	Description
ICJ23	8-759-906-78	s	IC 74F399PC
ICJ24	8-759-904-80	s	IC 74F04PC
ICJ25	8-759-500-72	s	IC SN74ALS157AN
ICJ26	8-759-500-72	s	IC SN74ALS157AN
ICJ27	8-759-904-87	s	IC 74F374PC
ICJ28	8-759-918-33	s	IC CX20160
ICJ29	8-759-918-33	s	IC CX20160
ICJ30	8-759-918-33	s	IC CX20160
ICK2	8-759-918-33	s	IC CX20160
ICK3	8-759-706-29	s	IC AT27HC642-ALU11K3V1
ICK4	8-759-904-82	s	IC 74F10PC
ICK5	8-759-904-83	s	IC 74F32PC
ICK6	8-759-910-01	s	IC CX23024
ICK7	8-759-910-01	s	IC CX23024
ICK8	8-759-910-01	s	IC CX23024
ICK9	8-759-910-01	s	IC CX23024
ICK10	8-759-910-01	s	IC CX23024
ICK11	8-759-910-01	s	IC CX23024
ICK12	8-759-910-01	s	IC CX23024
ICK13	8-759-910-01	s	IC CX23024
ICK14	8-759-904-87	s	IC 74F374PC
ICK15	8-759-942-67	s	IC L29C520PC
ICK16	8-759-942-67	s	IC L29C520PC
ICK17	8-759-908-69	s	IC 74F350PC
ICK18	8-759-908-69	s	IC 74F350PC
ICK19	8-759-918-33	s	IC CX20160
ICK20	8-759-906-78	s	IC 74F399PC
ICK21	8-759-906-78	s	IC 74F399PC
ICK22	8-759-906-78	s	IC 74F399PC
ICK23	8-759-906-78	s	IC 74F399PC
ICK24	8-759-500-72	s	IC SN74ALS157AN
ICK25	8-759-500-72	s	IC SN74ALS157AN
ICK26	8-759-500-72	s	IC SN74ALS157AN
ICK27	8-759-918-33	s	IC CX20160
ICK28	8-759-918-33	s	IC CX20160
ICK29	8-759-500-72	s	IC SN74ALS157AN
ICK30	8-759-918-33	s	IC CX20160

CN-456 BOARD

Ref. No. or Q'ty	Part No.	SP	Description
1pc	⚠A-6263-090-A	o	MOUNTED CIRCIUT BOARD, CN-456
1pc	7-682-648-09	s	SCREW +PS 3X8
1pc	7-684-023-04	s	N 3, TYPE 2
C1	1-124-518-11	s	ELECT 470uF 20% 6.3V
C2	1-161-485-00	s	CERAMIC 0.1uF 50V
C3	1-161-485-00	s	CERAMIC 0.1uF 50V
C4	1-161-485-00	s	CERAMIC 0.1uF 50V
C5	1-124-518-11	s	ELECT 470uF 20% 6.3V
C6	1-161-485-00	s	CERAMIC 0.1uF 50V
C7	1-131-347-00	s	TANTALUM 1uF 10% 35V
C8	1-124-522-11	s	ELECT 270uF 20% 16V
C9	1-161-485-00	s	CERAMIC 0.1uF 50V
C10	1-124-522-11	s	ELECT 270uF 20% 16V
C11	1-161-485-00	s	CERAMIC 0.1uF 50V
C12	1-124-522-11	s	ELECT 270uF 20% 16V
C13	1-161-485-00	s	CERAMIC 0.1uF 50V
C14	1-124-522-11	s	ELECT 270uF 20% 16V
C15	1-161-485-00	s	CERAMIC 0.1uF 50V
C16	1-161-485-00	s	CERAMIC 0.1uF 50V
C17	1-161-485-00	s	CERAMIC 0.1uF 50V
CN1	1-560-366-00	o	CONNECTOR POST HEADER,ILG (4P)
CN2	1-506-482-21	o	PIN, CONNECTOR 3P
CN3	1-506-482-21	o	PIN, CONNECTOR 3P
CN4	1-506-482-21	o	PIN, CONNECTOR 3P
CN5	1-560-366-00	o	CONNECTOR POST HEADER,ILG (4P)
D1	8-719-500-15	s	DIODE S3S4M
F1	⚠1-576-031-11	s	FUSE, MICRO
FB1	1-535-178-00	s	BEAD, FERRITE
FB2	1-535-178-00	s	BEAD, FERRITE
IC1	8-759-505-30	s	IC LT1171CT
L1	1-424-450-11	s	COIL, CHOKE 2.0MMH
L2	1-424-449-11	s	COIL, CHOKE 110MMH
R1	1-249-417-11	s	CARBON 1K 5% 1/4W
R2	1-249-429-11	s	CARBON 10K 5% 1/4W
R3	1-249-418-11	s	CARBON 1.2K 5% 1/4W
R4	1-249-422-11	s	CARBON 2.7K 5% 1/4W
R5	1-249-422-11	s	CARBON 2.7K 5% 1/4W
R6	1-249-422-11	s	CARBON 2.7K 5% 1/4W
R7	1-249-417-11	s	CARBON 1K 5% 1/4W
TH1	1-809-179-11	s	THERMISTOR 102AT-2

Parts that are not listed in the "reference number order list" are shown in the "General Purpose Electrical Parts List".

CN-462 BOARD

Ref. No. or Q'ty	Part No.	SP	Description
1pc	A-6259-452-A	o	MOUNTED CIRCIUT BOARD, CN-462
1pc	2-270-616-00	o	HANDLE
1pc	3-166-380-02	o	PANEL (2), CONNECTOR
1pc	3-167-576-01	o	BRACKET, HANDLE
6pcs	7-622-207-05	s	N 2.6, TYPE 2
6pcs	7-628-254-20	s	SCREW +PS 2.6X8
1pc	7-682-561-04	s	SCREW +B 4X8
2pcs	7-682-903-01	s	SCREW +PWH 3X5
2pcs	7-682-947-01	s	SCREW +PSW 3X6
CN1	1-563-337-11	s	CONNECTOR, DIN 96P, FEMALE
CN2	1-563-337-11	s	CONNECTOR, DIN 96P, FEMALE
CN3	1-563-337-11	s	CONNECTOR, DIN 96P, FEMALE
CN4	1-580-356-11	s	CONNECTOR, BNC
CN5	1-580-356-11	s	CONNECTOR, BNC
CN6	1-580-356-11	s	CONNECTOR, BNC
CN7	1-580-356-11	s	CONNECTOR, BNC
CN8	1-580-356-11	s	CONNECTOR, BNC
CN9	1-580-356-11	s	CONNECTOR, BNC
CN10	1-580-356-11	s	CONNECTOR, BNC
CN11	1-580-356-11	s	CONNECTOR, BNC
CN12	1-580-356-11	s	CONNECTOR, BNC
CN13	1-580-356-11	s	CONNECTOR, BNC
CN14	1-580-356-11	s	CONNECTOR, BNC
CN15	1-580-356-11	s	CONNECTOR, BNC
CN16	1-580-356-11	s	CONNECTOR, BNC
CN17	1-580-356-11	s	CONNECTOR, BNC
CN18	1-580-356-11	s	CONNECTOR, BNC
CN19	1-580-356-11	s	CONNECTOR, BNC
CN20	1-580-356-11	s	CONNECTOR, BNC
CN21	1-580-356-11	s	CONNECTOR, BNC
CN22	1-580-356-11	s	CONNECTOR, BNC
CN23	1-580-356-11	s	CONNECTOR, BNC
CN24	1-580-356-11	s	CONNECTOR, BNC
CN25	1-580-356-11	s	CONNECTOR, BNC
CN26	1-580-356-11	s	CONNECTOR, BNC
CN27	1-580-356-11	s	CONNECTOR, BNC
CN28	1-580-356-11	s	CONNECTOR, BNC
CN29	1-580-356-11	s	CONNECTOR, BNC
CN30	1-580-356-11	s	CONNECTOR, BNC
CN31	1-580-356-11	s	CONNECTOR, BNC
CN32	1-580-356-11	s	CONNECTOR, BNC
CN33	1-580-356-11	s	CONNECTOR, BNC
CN34	1-580-356-11	s	CONNECTOR, BNC
CN35	1-580-356-11	s	CONNECTOR, BNC
COP1	1-563-859-11	s	PLUG, SHORTING
COP2	1-563-859-11	s	PLUG, SHORTING
COP3	1-563-859-11	s	PLUG, SHORTING
COP4	1-563-859-11	s	PLUG, SHORTING
COP5	1-563-859-11	s	PLUG, SHORTING
COP6	1-563-859-11	s	PLUG, SHORTING
COP7	1-563-859-11	s	PLUG, SHORTING
COP8	1-563-859-11	s	PLUG, SHORTING
COR1	1-566-388-11	o	CONNECTOR, 8P, MALE
COR2	1-566-388-11	o	CONNECTOR, 8P, MALE
COR3	1-566-388-11	o	CONNECTOR, 8P, MALE
COR4	1-566-388-11	o	CONNECTOR, 8P, MALE

CN-463 BOARD

Ref. No. or Q'ty	Part No.	SP	Description
1pc	A-6259-453-A	o	MOUNTED CIRCIUT BOARD, CN-463
1pc	2-270-616-00	o	HANDLE
1pc	3-166-379-02	o	PANEL (1), CONNECTOR
1pc	3-167-576-01	o	BRACKET, HANDLE
24pcs	3-673-910-21	o	SCREW, CONNECTOR
4pcs	7-622-207-05	s	N 2.6, TYPE 2
4pcs	7-628-254-20	s	SCREW +PS 2.6X8
2pcs	7-682-561-04	s	SCREW +B 4X8
4pcs	7-682-903-01	s	SCREW +PWH 3X5
8pcs	7-682-947-01	s	SCREW +PSW 3X6
CN2	1-563-337-11	s	CONNECTOR, DIN 96P, FEMALE
CN3	1-563-337-11	s	CONNECTOR, DIN 96P, FEMALE
CN4	1-563-891-21	s	SOCKET, D-SUB CONNECTOR 25P
CN5	1-563-891-21	s	SOCKET, D-SUB CONNECTOR 25P
CN6	1-563-826-11	s	SOCKET, D-SUB CONNECTOR 15P
CN7	1-563-890-21	s	CONNECTOR, D-SUB 9P, FEMALE
CN8	1-563-890-21	s	CONNECTOR, D-SUB 9P, FEMALE
CN9	1-563-890-21	s	CONNECTOR, D-SUB 9P, FEMALE
CN10	1-563-890-21	s	CONNECTOR, D-SUB 9P, FEMALE
CN11	1-563-890-21	s	CONNECTOR, D-SUB 9P, FEMALE
CN12	1-563-890-21	s	CONNECTOR, D-SUB 9P, FEMALE
CN13	1-563-890-21	s	CONNECTOR, D-SUB 9P, FEMALE
CN14	1-563-890-21	s	CONNECTOR, D-SUB 9P, FEMALE
CN15	1-563-890-21	s	CONNECTOR, D-SUB 9P, FEMALE

Parts that are not listed in the "reference number order list" are shown in the "General Purpose Electrical Parts List".

CPU-82 BOARD

Ref. No. or Q'ty	Part No.	SP	Description
1pc	A-6259-454-A	o	MOUNTED CIRCIUT BOARD, CPU-82
3pcs	1-526-656-00	s	SOCKET, IC (DP) 20P
1pc	1-526-659-00	s	SOCKET, IC (DP) 28P
2pcs	1-526-660-21	s	SOCKET, IC (DP) 32P
1pc	1-526-662-21	s	SOCKET, IC (DP) 40P
1pc	1-540-084-11	s	SOCKET, IC (PGA TYPE)
2pcs	3-166-184-01	o	LEVER, PC BOARD
6pcs	7-621-773-87	s	SCREW +B 2.6X10
2pcs	7-622-207-05	s	N 2.6, TYPE 2
2pcs	7-626-320-11	o	PIN, SPRING 3X8
8pcs	7-682-948-01	s	SCREW +PSW 3X8
BT1	1-528-202-11	s	BATTERY,STORAGE,NICKEL CADMIUM
C1	1-124-589-11	s	ELECT 47uF 20% 16V
C2	1-124-589-11	s	ELECT 47uF 20% 16V
C3	1-126-162-11	s	ELECT 3.3uF 20% 50V
C5	1-126-162-11	s	ELECT 3.3uF 20% 50V
C7	1-126-162-11	s	ELECT 3.3uF 20% 50V
C9	1-126-162-11	s	ELECT 3.3uF 20% 50V
C11	1-162-215-31	s	CERAMIC 47PF 5% 50V
C12	1-126-162-11	s	ELECT 3.3uF 20% 50V
C13	1-162-195-31	s	CERAMIC 4.7PF 10% 50V
C14	1-162-195-31	s	CERAMIC 4.7PF 10% 50V
C15	1-162-195-31	s	CERAMIC 4.7PF 10% 50V
C16	1-162-195-31	s	CERAMIC 4.7PF 10% 50V
C17	1-126-157-11	s	ELECT 10uF 20% 16V
C18	1-162-195-31	s	CERAMIC 4.7PF 10% 50V
C19	1-162-195-31	s	CERAMIC 4.7PF 10% 50V
C20	1-162-195-31	s	CERAMIC 4.7PF 10% 50V
C21	1-162-195-31	s	CERAMIC 4.7PF 10% 50V
C22	1-162-290-31	s	CERAMIC 470PF 10% 50V
C23	1-162-290-31	s	CERAMIC 470PF 10% 50V
C24	1-162-290-31	s	CERAMIC 470PF 10% 50V
C25	1-162-290-31	s	CERAMIC 470PF 10% 50V
C26	1-131-375-00	s	TANTALUM 4.7uF 10% 10V
C27	1-126-157-11	s	ELECT 10uF 20% 16V
C28	1-126-157-11	s	ELECT 10uF 20% 16V
C29	1-131-363-00	s	TANTALUM 4.7uF 10% 20V
C30	1-126-157-11	s	ELECT 10uF 20% 16V
C129	1-162-215-31	s	CERAMIC 47PF 5% 50V
CN1	1-506-748-11	s	CONNECTOR, DIN 96P, MALE
CN2	1-506-748-11	s	CONNECTOR, DIN 96P, MALE
CN3	1-506-748-11	s	CONNECTOR, DIN 96P, MALE
COP1	1-563-859-11	s	PLUG, SHORTING
COP2	1-563-859-11	s	PLUG, SHORTING
COP3	1-563-859-11	s	PLUG, SHORTING
COP4	1-563-859-11	s	PLUG, SHORTING
COP5	1-563-859-11	s	PLUG, SHORTING
COP6	1-563-859-11	s	PLUG, SHORTING
COP7	1-563-859-11	s	PLUG, SHORTING
COP81	1-563-859-11	s	PLUG, SHORTING
COP82	1-563-859-11	s	PLUG, SHORTING
COP83	1-563-859-11	s	PLUG, SHORTING
COP84	1-563-859-11	s	PLUG, SHORTING
COP85	1-563-859-11	s	PLUG, SHORTING
COP86	1-563-859-11	s	PLUG, SHORTING
COR1	1-566-388-11	s	CONNECTOR, 8P, MALE

(CPU-82 BOARD)

Ref. No. or Q'ty	Part No.	SP	Description
COR2	1-566-388-11	s	CONNECTOR, 8P, MALE
COR3	1-566-388-11	s	CONNECTOR, 8P, MALE
COR4	1-566-388-11	s	CONNECTOR, 8P, MALE
COR5	1-566-388-11	s	CONNECTOR, 8P, MALE
COR6	1-566-388-11	s	CONNECTOR, 8P, MALE
COR7	1-566-388-11	s	CONNECTOR, 8P, MALE
COR8	1-566-391-11	o	PIN, CONNECTOR 12P
COR9	1-566-391-11	o	PIN, CONNECTOR 12P
D1	8-719-950-77	s	DIODE SLR-320VC3
D2	8-719-950-77	s	DIODE SLR-320VC3
D3	8-719-950-77	s	DIODE SLR-320VC3
D4	8-719-950-77	s	DIODE SLR-320VC3
D5	8-719-950-77	s	DIODE SLR-320VC3
D6	8-719-950-77	s	DIODE SLR-320VC3
D7	8-719-950-77	s	DIODE SLR-320VC3
D8	8-719-950-77	s	DIODE SLR-320VC3
D9	8-719-911-19	s	DIODE 1SS119
D10	8-719-911-19	s	DIODE 1SS119
D11	8-719-911-19	s	DIODE 1SS119
D12	8-719-911-19	s	DIODE 1SS119
D13	8-719-911-19	s	DIODE 1SS119
D14	8-719-911-19	s	DIODE 1SS119
D15	8-719-911-19	s	DIODE 1SS119
D16	8-719-911-19	s	DIODE 1SS119
D17	8-719-911-19	s	DIODE 1SS119
D18	8-719-911-19	s	DIODE 1SS119
D19	8-719-911-19	s	DIODE 1SS119
D20	8-719-911-19	s	DIODE 1SS119
D21	8-719-911-19	s	DIODE 1SS119
F1	1-576-031-11	s	FUSE, MICRO
ICA1	8-759-904-77	s	IC AM26LS32ACN
ICA2	8-759-916-20	s	IC SN74HC14N
ICA3	8-759-978-92	s	IC 74AC32PC
ICA4	8-759-719-04	s	IC GAL16V8A-CPU82A4V1
ICA5	8-759-980-05	s	IC 74AC08PC
ICA6	8-759-719-10	s	IC GAL16V8A-CPU82A6V1
ICA7	8-759-987-30	s	IC 74ACT373PC
ICA8	8-759-987-30	s	IC 74ACT373PC
ICA9	8-759-987-30	s	IC 74ACT373PC
ICA10	8-759-719-13	s	IC GAL16V8A-CPU82A10V1
ICA11	8-759-719-12	s	IC GAL16V8A-CPU82A11V1
ICA12	8-759-987-30	s	IC 74ACT373PC
ICA13	8-759-705-69	s	IC WS27C010L-CPU82A13V1
ICA15	8-759-705-68	s	IC WS27C010L-CPU82A15V1
ICA17	8-752-335-16	s	IC CXK581000P-10L
ICA19	8-752-335-16	s	IC CXK581000P-10L
ICA20	8-752-335-16	s	IC CXK581000P-10L
ICB1	8-759-926-40	s	IC SN74LS640N
ICB2	8-759-981-01	s	IC 74ACT245PC
ICB4	8-759-970-04	s	IC MB8421-90LP
ICB8	8-759-987-01	s	IC A80386DX-16
ICB11	8-759-978-90	s	IC 74AC02PC
ICB12	8-759-978-92	s	IC 74AC32PC
ICB13	8-759-705-71	s	IC WS27C010L-CPU82B13V1
ICB15	8-759-705-70	s	IC WS27C010L-CPU82B15V1
ICB17	8-752-335-16	s	IC CXK581000P-10L
ICB19	8-752-335-16	s	IC CXK581000P-10L

Parts that are not listed in the "reference number order list" are shown in the "General Purpose Electrical Parts List".

(CPU-82 BOARD)

Ref. No. or Q'ty	Part No.	SP	Description
ICB20	8-752-335-16	s	IC CXK581000P-10L
ICC1	8-759-926-40	s	IC SN74LS640N
ICC2	8-759-981-01	s	IC 74ACT245PC
ICC3	8-759-916-65	s	IC SN74HC240N
ICC11	8-759-719-11	s	IC GAL16V8A-CPU82C11V1
ICC12	8-759-987-30	s	IC 74ACT373PC
ICD1	8-759-987-31	s	IC 74ACT244PC
ICD2	8-759-987-31	s	IC 74ACT244PC
ICD3	8-759-978-92	s	IC 74AC32PC
ICD4	8-759-506-25	s	IC MB8431-90LP
ICD7	8-759-987-02	s	IC A80387DX-16
ICD10	8-759-719-09	s	IC GAL16V8A-CPU82D10V1
ICD11	8-759-719-08	s	IC GAL16V8A-CPU82D11V1
ICD12	8-759-719-07	s	IC GAL16V8A-CPU82D12V1
ICD13	8-759-980-06	s	IC 74AC74PC
ICD15	8-759-748-33	s	IC HN58C65P-25
ICD17	8-752-335-16	s	IC CXK581000P-10L
ICD19	8-752-335-16	s	IC CXK581000P-10L
ICD20	8-752-335-16	s	IC CXK581000P-10L
ICE1	8-759-987-31	s	IC 74ACT244PC
ICE2	8-759-987-31	s	IC 74ACT244PC
ICE3	8-759-987-31	s	IC 74ACT244PC
ICE11	8-759-242-59	s	IC TC74ACT04P
ICE12	8-759-994-71	s	IC 74AC109PC
ICE13	8-759-717-86	s	IC 74F379PC
ICE14	8-759-233-65	s	IC TC74HCT04AP
ICE17	8-752-335-16	s	IC CXK581000P-10L
ICE19	8-752-335-16	s	IC CXK581000P-10L
ICE20	8-752-335-16	s	IC CXK581000P-10L
ICF1	8-759-904-77	s	IC AM26LS32ACN
ICF2	8-759-926-30	s	IC AM26LS30PC
ICF5	8-759-149-06	s	IC UPD71054C-10
ICF6	8-752-330-77	s	IC CXK58257P-10LL
ICF8	8-759-705-66	s	IC TMS27C512-CPU82F8V1
ICF9	8-759-994-85	s	IC 74AC245PC
ICF10	8-759-981-03	s	IC 74AC373PC
ICF11	8-752-800-48	s	IC CXQ70116P-8
ICF13	8-759-107-56	s	IC CXQ71011P
ICF14	8-759-978-92	s	IC 74AC32PC
ICF15	8-759-981-01	s	IC 74ACT245PC
ICG2	8-759-926-30	s	IC AM26LS30PC
ICG3	8-759-113-74	s	IC UPD72001C
ICG5	8-759-105-76	s	IC UPD71059C
ICG6	8-752-330-77	s	IC CXK58257P-10LL
ICG8	8-759-705-67	s	IC TMS27C512-CPU82G8V1
ICG9	8-759-994-85	s	IC 74AC245PC
ICG10	8-759-981-03	s	IC 74AC373PC
ICG13	8-759-978-92	s	IC 74AC32PC
ICG14	8-759-105-76	s	IC UPD71059C
ICG15	8-759-916-65	s	IC SN74HC240N
ICG16	8-759-916-79	s	IC SN74HC273N
ICG17	8-759-916-65	s	IC SN74HC240N
ICG20	8-759-001-00	s	IC MC74HC132N
ICG21	8-759-505-28	s	IC MAX691CPE
ICH1	8-759-916-20	s	IC SN74HC14N
ICH2	8-759-938-75	s	IC MAX232CPE
ICH3	8-759-113-74	s	IC UPD72001C

(CPU-82 BOARD)

Ref. No. or Q'ty	Part No.	SP	Description
ICH5	8-759-917-43	s	IC SN74HC138N
ICH6	8-759-916-14	s	IC SN74HC04N
ICH7	8-759-917-37	s	IC SN74HC4024N
ICH9	8-759-505-28	s	IC MAX691CPE
ICH10	8-759-981-03	s	IC 74AC373PC
ICH11	8-759-719-06	s	IC GAL16V8A-CPU82H11V1
ICH13	8-759-719-05	s	IC GAL16V8A-CPU82H13V1
ICH14	8-759-149-04	s	IC UPD71051C-10
ICH15	8-759-206-41	s	IC TD62083AP
ICH16	8-759-916-79	s	IC SN74HC273N
ICH17	8-759-916-65	s	IC SN74HC240N
Q1	8-729-195-23	s	TRANSISTOR 2SA952
R26	1-215-385-00	s	METAL 33 1% 1/6W
R27	1-215-457-00	s	METAL 33K 1% 1/6W
R28	1-215-409-00	s	METAL 330 1% 1/6W
RB1	1-231-410-00	s	RESISTOR BLOCK 10Kx8
RB2	1-231-410-00	s	RESISTOR BLOCK 10Kx8
RB3	1-231-410-00	s	RESISTOR BLOCK 10Kx8
RB4	1-231-410-00	s	RESISTOR BLOCK 10Kx8
RB5	1-231-410-00	s	RESISTOR BLOCK 10Kx8
RB6	1-231-410-00	s	RESISTOR BLOCK 10Kx8
RB7	1-231-410-00	s	RESISTOR BLOCK 10Kx8
RB8	1-231-410-00	s	RESISTOR BLOCK 10Kx8
RB9	1-231-405-00	s	RESISTOR BLOCK 1K
RB10	1-231-410-00	s	RESISTOR BLOCK 10Kx8
RB11	1-231-410-00	s	RESISTOR BLOCK 10Kx8
RB12	1-231-410-00	s	RESISTOR BLOCK 10Kx8
RB13	1-231-410-00	s	RESISTOR BLOCK 10Kx8
RB14	1-231-410-00	s	RESISTOR BLOCK 10Kx8
RB15	1-231-410-00	s	RESISTOR BLOCK 10Kx8
RB16	1-231-410-00	s	RESISTOR BLOCK 10Kx8
RB17	1-231-410-00	s	RESISTOR BLOCK 10Kx8
RY1	1-515-640-11	s	RELAY (5V)
RY2	1-515-640-11	s	RELAY (5V)
RY3	1-515-640-11	s	RELAY (5V)
RY4	1-515-640-11	s	RELAY (5V)
S1	1-571-029-11	s	SWITCH, PUSH (1 KEY)
S2	1-570-623-11	s	SWITCH, DIP 8-CKT
S3	1-570-623-11	s	SWITCH, DIP 8-CKT
X1	1-567-787-11	s	OSCILLATOR, CRYSTAL
X2	1-567-976-11	s	OSCILLATOR, CRYSTAL

Parts that are not listed in the "reference number order list" are shown in the "General Purpose Electrical Parts List".

DLP-9 BOARD

Ref. No. or Q'ty	Part No.	SP	Description
1pc	A-6259-459-A	o	MOUNTED CIRCIUT BOARD, DLP-9
4pcs	1-526-654-00	s	SOCKET, IC (DP) 16P
3pcs	1-526-816-21	o	SOCKET, IC (DP) 24P
1pc	1-572-594-11	s	SWITCH, DIP
6pcs	2-280-622-21	o	SUPPORT (M3X10), HEXAGON
2pcs	3-166-184-01	o	LEVER, PC BOARD
6pcs	7-621-773-87	s	SCREW +B 2.6X10
2pcs	7-622-207-05	s	N 2.6, TYPE 2
2pcs	7-626-320-11	s	PIN, SPRING 3X8
1pc	7-682-948-01	s	SCREW +PSW 3X8
C1	1-124-589-11	s	ELECT 47uF 20% 16V
C2	1-124-589-11	s	ELECT 47uF 20% 16V
CN1	1-506-748-11	s	CONNECTOR, DIN 96P, MALE
CN2	1-506-748-11	s	CONNECTOR, DIN 96P, MALE
CN3	1-506-748-11	s	CONNECTOR, DIN 96P, MALE
CN4	1-580-674-11	o	CONNECTOR (PC BOARD) (M) 15P
CN5	1-580-673-11	o	CONNECTOR (PC BOARD) (M) 12P
CN6	1-580-673-11	o	CONNECTOR (PC BOARD) (M) 12P
CN7	1-580-674-11	o	CONNECTOR (PC BOARD) (M) 15P
CN8	1-569-606-11	o	CONNECTOR (PC BOARD) (M) 40P
F1	1-576-031-11	s	FUSE, MICRO
F2	1-576-031-11	s	FUSE, MICRO
ICA1	8-759-946-38	s	IC SN74ALS574AN
ICA2	8-759-946-38	s	IC SN74ALS574AN
ICA3	8-759-946-38	s	IC SN74ALS574AN
ICA4	8-759-500-72	s	IC SN74ALS157AN
ICA5	8-759-500-72	s	IC SN74ALS157AN
ICA6	8-759-946-64	s	IC SN74ALS04BN
ICA7	8-759-006-22	s	IC SN74LS283N
ICA8	8-759-990-97	s	IC CXD8156Q
ICA11	8-759-990-97	s	IC CXD8156Q
ICA13	8-759-990-97	s	IC CXD8156Q
ICA16	8-759-147-02	s	IC UPD42101C-3
ICA17	8-759-147-02	s	IC UPD42101C-3
ICA18	8-759-147-02	s	IC UPD42101C-3
ICA19	8-759-980-83	s	IC 74F574PC
ICA20	8-759-980-83	s	IC 74F574PC
ICB1	8-759-946-38	s	IC SN74ALS574AN
ICB2	8-759-946-38	s	IC SN74ALS574AN
ICB3	8-759-946-38	s	IC SN74ALS574AN
ICB4	8-759-705-63	s	IC CY7C291L-DLP9B4V1
ICB5	8-759-900-69	s	IC SN74ALS74AN
ICB6	8-759-006-22	s	IC SN74LS283N
ICB7	8-759-006-22	s	IC SN74LS283N
ICB8	8-759-942-67	s	IC L29C520PC
ICB10	8-759-990-97	s	IC CXD8156Q
ICB13	8-759-990-97	s	IC CXD8156Q
ICB16	8-759-147-02	s	IC UPD42101C-3
ICB17	8-759-147-02	s	IC UPD42101C-3
ICB18	8-759-147-02	s	IC UPD42101C-3
ICB19	8-759-147-02	s	IC UPD42101C-3
ICB20	8-759-946-64	s	IC SN74ALS04BN
ICB21	8-759-147-02	s	IC UPD42101C-3
ICB22	8-759-980-83	s	IC 74F574PC
ICB23	8-759-980-83	s	IC 74F574PC
ICB24	8-759-980-83	s	IC 74F574PC
ICB25	8-759-980-83	s	IC 74F574PC

(DLP-9 BOARD)

Ref. No. or Q'ty	Part No.	SP	Description
ICB26	8-759-147-02	s	IC UPD42101C-3
ICC1	8-759-946-38	s	IC SN74ALS574AN
ICC2	8-759-946-38	s	IC SN74ALS574AN
ICC3	8-759-918-33	s	IC CX20160
ICC4	8-759-500-72	s	IC SN74ALS157AN
ICC5	8-759-500-72	s	IC SN74ALS157AN
ICC6	8-759-946-38	s	IC SN74ALS574AN
ICC7	8-759-946-38	s	IC SN74ALS574AN
ICC8	8-759-942-67	s	IC L29C520PC
ICC9	8-759-705-61	s	IC CY7C291L-DLP9C9V1
ICC10	8-759-990-97	s	IC CXD8156Q
ICC13	8-759-990-97	s	IC CXD8156Q
ICC18	8-759-147-02	s	IC UPD42101C-3
ICC19	8-759-147-02	s	IC UPD42101C-3
ICC20	8-759-147-02	s	IC UPD42101C-3
ICC21	8-759-147-02	s	IC UPD42101C-3
ICC22	8-759-147-02	s	IC UPD42101C-3
ICC23	8-759-147-02	s	IC UPD42101C-3
ICC24	8-759-147-02	s	IC UPD42101C-3
ICC25	8-759-147-02	s	IC UPD42101C-3
ICC26	8-759-147-02	s	IC UPD42101C-3
ICD1	8-759-946-38	s	IC SN74ALS574AN
ICD2	8-759-946-38	s	IC SN74ALS574AN
ICD3	8-759-918-33	s	IC CX20160
ICD4	8-759-946-38	s	IC SN74ALS574AN
ICD5	8-759-705-63	s	IC CY7C291L-DLP9B4V1
ICD6	8-759-705-53	s	IC MB7112L-DLP9D6V1
ICD7	8-759-705-52	s	IC MB7112L-DLP9D7V1
ICD8	8-759-705-57	s	IC MB7112L-DLP9D8V1
ICD9	8-759-705-60	s	IC MB7112L-DLP9D9V1
ICD10	8-759-990-97	s	IC CXD8156Q
ICD20	8-759-147-02	s	IC UPD42101C-3
ICD21	8-759-147-02	s	IC UPD42101C-3
ICD22	8-759-147-02	s	IC UPD42101C-3
ICD23	8-759-147-02	s	IC UPD42101C-3
ICD24	8-759-147-02	s	IC UPD42101C-3
ICD25	8-759-147-02	s	IC UPD42101C-3
ICD26	8-759-147-02	s	IC UPD42101C-3
ICE1	8-759-904-77	s	IC AM26LS32ACN
ICE2	8-759-900-69	s	IC SN74ALS74AN
ICE3	8-759-904-26	s	IC SN74ALS08N
ICE4	8-759-500-72	s	IC SN74ALS157AN
ICE5	8-759-946-36	s	IC SN74ALS163BN
ICE6	8-759-946-36	s	IC SN74ALS163BN
ICE7	8-759-912-03	s	IC SN74ALS138N
ICE8	8-759-705-56	s	IC MB7112L-DLP9E8V1
ICE9	8-759-705-59	s	IC MB7112L-DLP9E9V1
ICE14	8-759-990-97	s	IC CXD8156Q
ICE17	8-759-990-97	s	IC CXD8156Q
ICE20	8-759-990-97	s	IC CXD8156Q
ICE22	8-759-990-97	s	IC CXD8156Q
ICE25	8-759-147-02	s	IC UPD42101C-3
ICE26	8-759-147-02	s	IC UPD42101C-3
ICF1	8-759-901-44	s	IC 74F240PC
ICF2	8-759-901-44	s	IC 74F240PC
ICF3	8-759-946-64	s	IC SN74ALS04BN
ICF4	8-759-500-72	s	IC SN74ALS157AN
ICF5	8-759-705-65	s	IC AT27HC642-DLP9F5V1

Parts that are not listed in the "reference number order list" are shown in the "General Purpose Electrical Parts List".

(DLP-9 BOARD)

Ref. No. or Q'ty	Part No.	SP	Description
ICF6	8-759-705-65	s	IC AT27HC642-DLP9F5V1
ICF7	8-759-705-64	s	IC AT27HC642-DLP9F7V1
ICF8	8-759-705-55	s	IC MB7112L-DLP9F8V1
ICF9	8-759-705-54	s	IC MB7112L-DLP9F9V1
ICF12	8-759-990-97	s	IC CXD8156Q
ICF14	8-759-990-97	s	IC CXD8156Q
ICF17	8-759-990-97	s	IC CXD8156Q
ICF20	8-759-990-97	s	IC CXD8156Q
ICF22	8-759-990-97	s	IC CXD8156Q
ICF25	8-759-990-97	s	IC CXD8156Q
ICG1	8-759-946-38	s	IC SN74ALS574AN
ICG3	8-759-500-04	s	IC LSP001AC-Q
ICG5	8-759-500-04	s	IC LSP001AC-Q
ICG7	8-759-946-38	s	IC SN74ALS574AN
ICG9	8-759-500-04	s	IC LSP001AC-Q
ICH1	8-759-946-38	s	IC SN74ALS574AN
ICH3	8-759-500-04	s	IC LSP001AC-Q
ICH5	8-759-500-04	s	IC LSP001AC-Q
ICH6	8-759-901-25	s	IC SN74LS125AN
ICH7	8-759-946-38	s	IC SN74ALS574AN
ICH9	8-759-500-04	s	IC LSP001AC-Q
ICJ1	8-759-946-38	s	IC SN74ALS574AN
ICJ11	8-759-506-43	s	IC TMC2111B2C
ICJ12	8-759-506-43	s	IC TMC2111B2C
ICJ13	8-759-980-83	s	IC 74F574PC
ICJ14	8-759-506-43	s	IC TMC2111B2C
ICJ15	8-759-506-43	s	IC TMC2111B2C
ICJ16	8-759-980-83	s	IC 74F574PC
ICJ17	8-759-506-43	s	IC TMC2111B2C
ICJ18	8-759-506-43	s	IC TMC2111B2C
ICJ20	8-759-990-97	s	IC CXD8156Q
ICJ22	8-759-990-97	s	IC CXD8156Q
ICJ25	8-759-990-97	s	IC CXD8156Q
ICK3	8-759-500-04	s	IC LSP001AC-Q
ICK5	8-759-500-04	s	IC LSP001AC-Q
ICK6	8-759-937-47	s	IC SN74ALS86N
ICK7	8-759-946-38	s	IC SN74ALS574AN
ICK9	8-759-500-04	s	IC LSP001AC-Q
ICK11	8-759-946-64	s	IC SN74ALS04BN
ICK12	8-759-946-64	s	IC SN74ALS04BN
ICK13	8-759-980-83	s	IC 74F574PC
ICK16	8-759-980-83	s	IC 74F574PC
ICK17	8-759-980-83	s	IC 74F574PC
ICK18	8-759-980-83	s	IC 74F574PC
R1	1-249-425-11	s	CARBON 4.7K 5% 1/4W
R2	1-249-425-11	s	CARBON 4.7K 5% 1/4W
R3	1-249-425-11	s	CARBON 4.7K 5% 1/4W
R4	1-249-425-11	s	CARBON 4.7K 5% 1/4W
R5	1-249-425-11	s	CARBON 4.7K 5% 1/4W
R6	1-249-425-11	s	CARBON 4.7K 5% 1/4W
R7	1-249-425-11	s	CARBON 4.7K 5% 1/4W
R8	1-249-425-11	s	CARBON 4.7K 5% 1/4W
R9	1-249-425-11	s	CARBON 4.7K 5% 1/4W
R10	1-249-425-11	s	CARBON 4.7K 5% 1/4W
R11	1-249-425-11	s	CARBON 4.7K 5% 1/4W
R12	1-249-425-11	s	CARBON 4.7K 5% 1/4W
R13	1-249-425-11	s	CARBON 4.7K 5% 1/4W

(DLP-9 BOARD)

Ref. No. or Q'ty	Part No.	SP	Description
R14	1-249-425-11	s	CARBON 4.7K 5% 1/4W
R15	1-249-425-11	s	CARBON 4.7K 5% 1/4W
R16	1-249-425-11	s	CARBON 4.7K 5% 1/4W
R17	1-249-425-11	s	CARBON 4.7K 5% 1/4W
R18	1-249-425-11	s	CARBON 4.7K 5% 1/4W
R19	1-249-410-11	s	CARBON 270 5% 1/4W
R20	1-249-410-11	s	CARBON 270 5% 1/4W
R21	1-249-410-11	s	CARBON 270 5% 1/4W
R22	1-249-410-11	s	CARBON 270 5% 1/4W
R23	1-249-410-11	s	CARBON 270 5% 1/4W
R24	1-249-410-11	s	CARBON 270 5% 1/4W
RB1	1-231-385-00	s	RESISTOR BLOCK 4.7Kx8
RB2	1-231-525-00	s	RESISTOR BLOCK 4.7Kx4
RB3	1-231-525-00	s	RESISTOR BLOCK 4.7Kx4
RB4	1-231-525-00	s	RESISTOR BLOCK 4.7Kx4
RB5	1-231-525-00	s	RESISTOR BLOCK 4.7Kx4
RB6	1-231-525-00	s	RESISTOR BLOCK 4.7Kx4
RB7	1-231-525-00	s	RESISTOR BLOCK 4.7Kx4
S1	1-570-621-11	s	SWITCH, DIP
S2	1-554-027-00	s	SWITCH, DIGITAL
S3	1-570-598-11	s	SWITCH, DIP 4-CKT
S4	1-554-027-00	s	SWITCH, DIGITAL

Parts that are not listed in the "reference number order list" are shown in the "General Purpose Electrical Parts List".

DLP-10 BOARD

Ref. No. or Q'ty	Part No.	SP	Description
6pcs	1-590-194-11	o	SOCKET, SIL (12P)
CN1	1-580-675-11	o	CONNECTOR (PC BOARD) (F) 15P
CN2	1-562-772-11	o	CONNECTOR, 12P, FEMALE
CN3	1-562-772-11	o	CONNECTOR, 12P, FEMALE
CN4	1-580-675-11	o	CONNECTOR (PC BOARD) (F) 15P
CN5	1-562-773-11	o	CONNECTOR, 40P, FEMALE
ICA4	8-759-946-38	s	IC SN74ALS574AN
ICA5	8-759-946-38	s	IC SN74ALS574AN
ICA6	8-759-705-40	s	IC AT27HC642-DLP10A6V1
ICA8	8-759-946-38	s	IC SN74ALS574AN
ICA9	8-759-946-38	s	IC SN74ALS574AN
ICA10	8-759-705-41	s	IC AT27HC642-DLP10A10V1
ICA12	8-759-946-38	s	IC SN74ALS574AN
ICA13	8-759-946-38	s	IC SN74ALS574AN
ICA14	8-759-705-40	s	IC AT27HC642-DLP10A6V1
ICB1	8-752-304-30	s	IC CX23043
ICB3	8-752-304-30	s	IC CX23043
ICB4	8-759-990-97	s	IC CXD8156Q
ICB6	8-759-942-67	s	IC L29C520PC
ICB7	8-759-942-67	s	IC L29C520PC
ICB8	8-759-990-97	s	IC CXD8156Q
ICB10	8-759-942-67	s	IC L29C520PC
ICB11	8-759-942-67	s	IC L29C520PC
ICB12	8-759-990-97	s	IC CXD8156Q
ICB14	8-759-942-67	s	IC L29C520PC
ICB15	8-759-942-67	s	IC L29C520PC
ICC1	8-759-946-64	s	IC SN74ALS04BN
ICC2	8-759-705-46	s	IC WS57C291B-DLP10C2V1
ICC3	8-759-705-45	s	IC WS57C291B-DLP10C3V1
ICC4	8-759-990-97	s	IC CXD8156Q
ICC6	8-759-990-97	s	IC CXD8156Q
ICC8	8-759-990-97	s	IC CXD8156Q
ICC10	8-759-990-97	s	IC CXD8156Q
ICC12	8-759-990-97	s	IC CXD8156Q
ICC14	8-759-990-97	s	IC CXD8156Q
ICD1	8-759-705-44	s	IC WS57C291B-DLP10D1V1
ICD2	8-759-705-43	s	IC WS57C291B-DLP10D2V1
ICD3	8-759-705-51	s	IC WS57C291B-DLP10D3V1
ICD4	8-759-942-67	s	IC L29C520PC
ICD5	8-759-942-67	s	IC L29C520PC
ICD6	8-759-946-38	s	IC SN74ALS574AN
ICD7	8-759-946-38	s	IC SN74ALS574AN
ICD8	8-759-942-67	s	IC L29C520PC
ICD9	8-759-942-67	s	IC L29C520PC
ICD10	8-759-946-38	s	IC SN74ALS574AN
ICD11	8-759-946-38	s	IC SN74ALS574AN
ICD12	8-759-942-67	s	IC L29C520PC
ICD13	8-759-942-67	s	IC L29C520PC
ICD14	8-759-946-38	s	IC SN74ALS574AN
ICD15	8-759-946-38	s	IC SN74ALS574AN
ICE2	8-759-705-42	s	IC WS57C291B-DLP10E2V1
ICE3	8-759-705-50	s	IC WS57C291B-DLP10E3V1
ICE4	8-759-990-97	s	IC CXD8156Q
ICE6	8-759-990-97	s	IC CXD8156Q
ICE8	8-759-990-97	s	IC CXD8156Q
ICE10	8-759-990-97	s	IC CXD8156Q
ICE12	8-759-990-97	s	IC CXD8156Q

(DLP-10 BOARD)

Ref. No. or Q'ty	Part No.	SP	Description
ICE14	8-759-990-97	s	IC CXD8156Q
ICF1	8-759-705-48	s	IC WS57C291B-DLP10F1V1
ICF2	8-759-705-47	s	IC WS57C291B-DLP10F2V1
ICF3	8-759-705-49	s	IC WS57C291B-DLP10F3V1
ICG2	8-759-500-72	s	IC SN74ALS157AN
ICG3	8-759-500-72	s	IC SN74ALS157AN
ICG4	8-759-147-02	s	IC UPD42101C-3
ICG5	8-759-147-02	s	IC UPD42101C-3
ICG6	8-759-147-02	s	IC UPD42101C-3
ICG7	8-759-147-02	s	IC UPD42101C-3
ICG8	8-759-147-02	s	IC UPD42101C-3
ICG9	8-759-147-02	s	IC UPD42101C-3
ICG10	8-759-147-02	s	IC UPD42101C-3
ICG11	8-759-147-02	s	IC UPD42101C-3
ICG12	8-759-147-02	s	IC UPD42101C-3
ICG13	8-759-147-02	s	IC UPD42101C-3
ICG14	8-759-147-02	s	IC UPD42101C-3
ICG15	8-759-147-02	s	IC UPD42101C-3
ICH1	8-759-901-44	s	IC 74F240PC
ICH2	8-759-946-38	s	IC SN74ALS574AN
ICH3	8-759-946-38	s	IC SN74ALS574AN
ICH4	8-759-990-97	s	IC CXD8156Q
ICH6	8-759-946-38	s	IC SN74ALS574AN
ICH7	8-759-946-38	s	IC SN74ALS574AN
ICH8	8-759-990-97	s	IC CXD8156Q
ICH10	8-759-946-38	s	IC SN74ALS574AN
ICH11	8-759-946-38	s	IC SN74ALS574AN
ICH12	8-759-990-97	s	IC CXD8156Q
ICH14	8-759-946-38	s	IC SN74ALS574AN
ICH15	8-759-946-38	s	IC SN74ALS574AN
R1	1-249-425-11	s	CARBON 4.7K 5% 1/4W
R2	1-249-425-11	s	CARBON 4.7K 5% 1/4W
R3	1-249-425-11	s	CARBON 4.7K 5% 1/4W
R4	1-249-425-11	s	CARBON 4.7K 5% 1/4W
R5	1-249-425-11	s	CARBON 4.7K 5% 1/4W
R6	1-249-425-11	s	CARBON 4.7K 5% 1/4W
R7	1-249-425-11	s	CARBON 4.7K 5% 1/4W
R8	1-249-425-11	s	CARBON 4.7K 5% 1/4W
R9	1-249-425-11	s	CARBON 4.7K 5% 1/4W
R10	1-249-425-11	s	CARBON 4.7K 5% 1/4W
R11	1-249-425-11	s	CARBON 4.7K 5% 1/4W
R12	1-249-425-11	s	CARBON 4.7K 5% 1/4W
R13	1-249-425-11	s	CARBON 4.7K 5% 1/4W
R14	1-249-425-11	s	CARBON 4.7K 5% 1/4W
R15	1-249-425-11	s	CARBON 4.7K 5% 1/4W
R16	1-249-425-11	s	CARBON 4.7K 5% 1/4W
R17	1-249-425-11	s	CARBON 4.7K 5% 1/4W
R18	1-249-425-11	s	CARBON 4.7K 5% 1/4W
R19	1-249-425-11	s	CARBON 4.7K 5% 1/4W
R20	1-249-425-11	s	CARBON 4.7K 5% 1/4W
R21	1-249-425-11	s	CARBON 4.7K 5% 1/4W
R22	1-249-425-11	s	CARBON 4.7K 5% 1/4W
R23	1-249-425-11	s	CARBON 4.7K 5% 1/4W
R24	1-249-425-11	s	CARBON 4.7K 5% 1/4W
R25	1-249-425-11	s	CARBON 4.7K 5% 1/4W
R26	1-249-425-11	s	CARBON 4.7K 5% 1/4W
R27	1-249-425-11	s	CARBON 4.7K 5% 1/4W

Parts that are not listed in the "reference number order list" are shown in the "General Purpose Electrical Parts List".

(DLP-10 BOARD)

Ref. No. or Q'ty	Part No.	SP	Description
R28	1-249-425-11	s	CARBON 4.7K 5% 1/4W
R29	1-249-425-11	s	CARBON 4.7K 5% 1/4W
R30	1-249-425-11	s	CARBON 4.7K 5% 1/4W
R31	1-249-425-11	s	CARBON 4.7K 5% 1/4W
R32	1-249-425-11	s	CARBON 4.7K 5% 1/4W
R33	1-249-425-11	s	CARBON 4.7K 5% 1/4W
R34	1-249-425-11	s	CARBON 4.7K 5% 1/4W
R35	1-249-425-11	s	CARBON 4.7K 5% 1/4W
R36	1-249-425-11	s	CARBON 4.7K 5% 1/4W
R37	1-249-425-11	s	CARBON 4.7K 5% 1/4W
R38	1-249-425-11	s	CARBON 4.7K 5% 1/4W
R39	1-249-425-11	s	CARBON 4.7K 5% 1/4W
R40	1-249-425-11	s	CARBON 4.7K 5% 1/4W
R41	1-249-425-11	s	CARBON 4.7K 5% 1/4W
R42	1-249-425-11	s	CARBON 4.7K 5% 1/4W
R43	1-249-425-11	s	CARBON 4.7K 5% 1/4W
R44	1-249-425-11	s	CARBON 4.7K 5% 1/4W
R45	1-249-425-11	s	CARBON 4.7K 5% 1/4W
R46	1-249-425-11	s	CARBON 4.7K 5% 1/4W
R47	1-249-425-11	s	CARBON 4.7K 5% 1/4W
R48	1-249-425-11	s	CARBON 4.7K 5% 1/4W
R49	1-249-425-11	s	CARBON 4.7K 5% 1/4W
R50	1-249-425-11	s	CARBON 4.7K 5% 1/4W
R51	1-249-425-11	s	CARBON 4.7K 5% 1/4W
R52	1-249-425-11	s	CARBON 4.7K 5% 1/4W
S1	1-570-727-11	s	SWITCH, DIP
S2	1-570-727-11	s	SWITCH, DIP
S3	1-570-727-11	s	SWITCH, DIP
S4	1-572-594-11	s	SWITCH, DIP
S5	1-570-728-11	s	SWITCH, DIP
S6	1-570-728-11	s	SWITCH, DIP

DPR-15 BOARD

Ref. No. or Q'ty	Part No.	SP	Description
1pc	A-6259-460-A	o	MOUNTED CIRCIUT BOARD, DPR-15
1pc	1-526-656-00	s	SOCKET, IC (DP) 20P
5pcs	1-526-816-21	o	SOCKET, IC (DP) 24P
2pcs	3-166-184-01	o	LEVER, PC BOARD
6pcs	7-621-773-87	s	SCREW +B 2.6X10
2pcs	7-622-207-05	s	N 2.6, TYPE 2
2pcs	7-626-320-11	s	PIN, SPRING 3X8
8pcs	7-682-948-01	s	SCREW +PSW 3X8
C1	1-124-589-11	s	ELECT 47uF 20% 16V
CN1	1-506-748-11	s	CONNECTOR, DIN 96P, MALE
CN2	1-506-748-11	s	CONNECTOR, DIN 96P, MALE
CN3	1-506-748-11	s	CONNECTOR, DIN 96P, MALE
F1	1-576-031-11	s	FUSE, MICRO
F2	1-576-031-11	s	FUSE, MICRO
ICA1	8-759-946-38	s	IC SN74ALS574AN
ICA2	8-759-946-38	s	IC SN74ALS574AN
ICA3	8-759-946-38	s	IC SN74ALS574AN
ICA4	8-759-946-38	s	IC SN74ALS574AN
ICA5	8-759-916-71	s	IC SN74HC244N
ICA6	8-759-916-71	s	IC SN74HC244N
ICA7	8-752-322-06	s	IC CXK5814P-35
ICA8	8-752-322-06	s	IC CXK5814P-35
ICA9	8-759-921-34	s	IC SN74HC245N
ICA10	8-759-921-34	s	IC SN74HC245N
ICA11	8-759-946-38	s	IC SN74ALS574AN
ICA12	8-759-946-38	s	IC SN74ALS574AN
ICA13	8-759-719-15	s	IC PEEL18CV8P-SAM001V1
ICA14	8-759-946-38	s	IC SN74ALS574AN
ICA15	8-759-147-02	s	IC UPD42101C-3
ICA16	8-759-147-02	s	IC UPD42101C-3
ICA17	8-759-918-33	s	IC CX20160
ICA18	8-759-948-19	s	IC V74ACT821PS
ICA19	8-759-706-02	s	IC WS57C291B-DPR15A19V1
ICA20	8-759-946-38	s	IC SN74ALS574AN
ICA21	8-759-948-19	s	IC V74ACT821PS
ICA22	8-759-706-01	s	IC WS57C291B-DPR15A22V1
ICA23	8-759-946-38	s	IC SN74ALS574AN
ICA24	8-759-948-19	s	IC V74ACT821PS
ICA25	8-759-706-05	s	IC WS57C291B-DPR15A25V1
ICA26	8-759-946-38	s	IC SN74ALS574AN
ICA27	8-759-706-03	s	IC WS57C291B-DPR15A27V1
ICA28	8-759-946-38	s	IC SN74ALS574AN
ICA29	8-759-948-19	s	IC V74ACT821PS
ICA30	8-759-706-04	s	IC WS57C291B-DPR15A30V1
ICA31	8-759-946-38	s	IC SN74ALS574AN
ICB1	8-759-946-38	s	IC SN74ALS574AN
ICB2	8-759-946-38	s	IC SN74ALS574AN
ICB3	8-759-946-38	s	IC SN74ALS574AN
ICB4	8-759-946-38	s	IC SN74ALS574AN
ICB5	8-759-916-71	s	IC SN74HC244N
ICB6	8-759-916-71	s	IC SN74HC244N
ICB7	8-752-322-06	s	IC CXK5814P-35
ICB8	8-752-322-06	s	IC CXK5814P-35
ICB9	8-759-921-34	s	IC SN74HC245N
ICB10	8-759-921-34	s	IC SN74HC245N
ICB11	8-759-946-38	s	IC SN74ALS574AN

Parts that are not listed in the "reference number order list" are shown in the "General Purpose Electrical Parts List".

(DPR-15 BOARD)

Ref. No. or Q'ty	Part No.	SP	Description
ICB12	8-759-946-38	s	IC SN74ALS574AN
ICB13	8-759-719-15	s	IC PEEL18CV8P-SAM001V1
ICB14	8-759-946-38	s	IC SN74ALS574AN
ICB15	8-759-147-02	s	IC UPD42101C-3
ICB16	8-759-147-02	s	IC UPD42101C-3
ICB17	8-759-918-33	s	IC CX20160
ICB18	8-759-917-87	s	IC 74F382PC
ICB19	8-759-917-87	s	IC 74F382PC
ICB20	8-759-946-38	s	IC SN74ALS574AN
ICB21	8-759-917-87	s	IC 74F382PC
ICB22	8-759-917-87	s	IC 74F382PC
ICB23	8-759-901-44	s	IC 74F240PC
ICB24	8-759-917-87	s	IC 74F382PC
ICB25	8-759-917-87	s	IC 74F382PC
ICB26	8-759-917-87	s	IC 74F382PC
ICB27	8-759-948-19	s	IC V74ACT821PS
ICB28	8-759-946-38	s	IC SN74ALS574AN
ICB29	8-759-917-87	s	IC 74F382PC
ICB30	8-759-917-87	s	IC 74F382PC
ICB31	8-759-912-05	s	IC SN74ALS161BN
ICB32	8-759-946-64	s	IC SN74ALS04BN
ICB9A	8-759-904-26	s	IC SN74ALS08N
ICB10A	8-759-904-38	s	IC SN74ALS32N
ICB11A	8-759-904-36	s	IC SN74ALS27N
ICB12A	8-759-916-14	s	IC SN74HC04N
ICC1	8-759-946-38	s	IC SN74ALS574AN
ICC2	8-759-946-38	s	IC SN74ALS574AN
ICC3	8-759-936-60	s	IC SN74ALS273N
ICC4	8-759-936-60	s	IC SN74ALS273N
ICC5	8-759-946-38	s	IC SN74ALS574AN
ICC6	8-759-918-33	s	IC CX20160
ICC7	8-759-904-81	s	IC 74F08PC
ICC8	8-759-946-38	s	IC SN74ALS574AN
ICC9	8-759-904-26	s	IC SN74ALS08N
ICC10	8-759-946-64	s	IC SN74ALS04BN
ICC11	8-759-904-36	s	IC SN74ALS27N
ICC13	8-759-948-19	s	IC V74ACT821PS
ICC14	8-759-948-19	s	IC V74ACT821PS
ICC15	8-759-946-38	s	IC SN74ALS574AN
ICC16	8-759-946-38	s	IC SN74ALS574AN
ICC17	8-759-917-87	s	IC 74F382PC
ICC18	8-759-917-87	s	IC 74F382PC
ICC19	8-759-946-38	s	IC SN74ALS574AN
ICC20	8-759-948-19	s	IC V74ACT821PS
ICC21	8-759-706-00	s	IC WS57C291B-DPR15C21V1
ICC22	8-759-946-38	s	IC SN74ALS574AN
ICC23	8-759-946-38	s	IC SN74ALS574AN
ICC24	8-759-946-38	s	IC SN74ALS574AN
ICC25	8-759-946-38	s	IC SN74ALS574AN
ICC26	8-759-917-87	s	IC 74F382PC
ICC27	8-759-906-76	s	IC 74F283PC
ICC28	8-759-906-76	s	IC 74F283PC
ICC29	8-759-946-38	s	IC SN74ALS574AN
ICC31	8-759-948-19	s	IC V74ACT821PS
ICD1	8-759-904-77	s	IC AM26LS32ACN
ICD2	8-759-901-44	s	IC 74F240PC
ICD3	8-759-900-69	s	IC SN74ALS74AN
ICD4	8-759-900-69	s	IC SN74ALS74AN
ICD5	8-759-900-69	s	IC SN74ALS74AN

(DPR-15 BOARD)

Ref. No. or Q'ty	Part No.	SP	Description
ICD6	8-759-904-18	s	IC SN74ALS00AN
ICD7	8-759-916-66	s	IC SN74HCT240N
ICD8	8-759-901-44	s	IC 74F240PC
ICD9	8-759-906-71	s	IC 74F175PC
ICD10	8-759-917-06	s	IC SN74HC574N
ICD11	8-759-917-06	s	IC SN74HC574N
ICD12	8-759-917-06	s	IC SN74HC574N
ICD13	8-759-917-06	s	IC SN74HC574N
ICD15	8-759-900-69	s	IC SN74ALS74AN
ICD16	8-759-906-76	s	IC 74F283PC
ICD17	8-759-906-76	s	IC 74F283PC
ICD19	8-752-337-41	s	IC CXK1206M
ICD22	8-752-337-41	s	IC CXK1206M
ICD24	8-752-337-41	s	IC CXK1206M
ICD26	8-759-948-19	s	IC V74ACT821PS
ICD27	8-759-706-06	s	IC WS57C291B-DPR15D27V1
ICD28	8-759-946-38	s	IC SN74ALS574AN
ICD29	8-759-946-38	s	IC SN74ALS574AN
ICD30	8-759-917-87	s	IC 74F382PC
ICD31	8-759-917-87	s	IC 74F382PC
ICE1	8-759-916-66	s	IC SN74HCT240N
ICE2	8-759-912-30	s	IC SN74ALS640AN
ICE3	8-759-916-66	s	IC SN74HCT240N
ICE4	8-759-916-66	s	IC SN74HCT240N
ICE5	8-759-916-66	s	IC SN74HCT240N
ICE6	8-759-916-18	s	IC SN74HC10N
ICE7	8-759-916-14	s	IC SN74HC04N
ICE8	8-759-917-43	s	IC SN74HC138N
ICE9	8-759-917-06	s	IC SN74HC574N
ICE10	8-759-917-06	s	IC SN74HC574N
ICE11	8-759-917-06	s	IC SN74HC574N
ICE12	8-759-917-06	s	IC SN74HC574N
ICE13	8-759-917-06	s	IC SN74HC574N
ICE14	8-759-917-06	s	IC SN74HC574N
ICE16	8-759-918-33	s	IC CX20160
ICE19	8-752-337-41	s	IC CXK1206M
ICE22	8-752-337-41	s	IC CXK1206M
ICE24	8-752-337-41	s	IC CXK1206M
ICE26	8-759-946-38	s	IC SN74ALS574AN
ICE27	8-759-946-38	s	IC SN74ALS574AN
ICE28	8-759-706-08	s	IC WS57C291B-DPR15E28V1
ICE29	8-759-948-19	s	IC V74ACT821PS
ICE30	8-752-304-30	s	IC CX23043
ICE8A	8-759-917-43	s	IC SN74HC138N
ICF1	8-759-916-66	s	IC SN74HCT240N
ICF2	8-759-916-66	s	IC SN74HCT240N
ICF3	8-759-946-38	s	IC SN74ALS574AN
ICF4	8-759-946-38	s	IC SN74ALS574AN
ICF5	8-759-916-42	s	IC SN74HC133N
ICF6	8-759-916-42	s	IC SN74HC133N
ICF7	8-759-916-42	s	IC SN74HC133N
ICF8	8-759-904-38	s	IC SN74ALS32N
ICF9	8-759-147-02	s	IC UPD42101C-3
ICF10	8-759-906-78	s	IC 74F399PC
ICF11	8-759-906-78	s	IC 74F399PC
ICF12	8-759-706-20	s	IC AT27HC642-DPR15F12V1
ICF13	8-759-946-38	s	IC SN74ALS574AN
ICF14	8-759-946-38	s	IC SN74ALS574AN
ICF15	8-759-706-21	s	IC AT27HC642-DPR15F15V1

Parts that are not listed in the "reference number order list" are shown in the "General Purpose Electrical Parts List".

(DPR-15 BOARD)

Ref. No. or Q'ty	Part No.	SP	Description
ICF16	8-759-936-60	s	IC SN74ALS273N
ICF17	8-759-706-09	s	IC WS57C291B-DPR15F17V1
ICF19	8-752-337-41	s	IC CXK1206M
ICF22	8-752-337-41	s	IC CXK1206M
ICF24	8-752-337-41	s	IC CXK1206M
ICF26	8-759-946-38	s	IC SN74ALS574AN
ICF27	8-759-946-38	s	IC SN74ALS574AN
ICF28	8-759-917-87	s	IC 74F382PC
ICF29	8-759-917-87	s	IC 74F382PC
ICF8A	8-759-803-70	s	IC SN74HC08N
ICG1	8-759-946-38	s	IC SN74ALS574AN
ICG2	8-759-946-38	s	IC SN74ALS574AN
ICG3	8-759-705-98	s	IC WS57C291B-DPR15G3V1
ICG4	8-759-706-22	s	IC AT27HC642-DPR15G4V1
ICG5	8-759-946-38	s	IC SN74ALS574AN
ICG6	8-759-147-02	s	IC UPD42101C-3
ICG7	8-759-946-38	s	IC SN74ALS574AN
ICG8	8-759-706-23	o	IC AT27HC642-DPR15G8V1
ICG9	8-759-946-38	s	IC SN74ALS574AN
ICG10	8-759-946-38	s	IC SN74ALS574AN
ICG11	8-759-906-76	s	IC 74F283PC
ICG12	8-759-706-24	s	IC AT27HC642-DPR15G12V1
ICG13	8-759-948-28	s	IC SM5828P
ICG15	8-759-147-02	s	IC UPD42101C-3
ICG16	8-759-147-02	s	IC UPD42101C-3
ICG17	8-759-147-02	s	IC UPD42101C-3
ICG19	8-752-337-41	s	IC CXK1206M
ICG22	8-752-337-41	s	IC CXK1206M
ICG24	8-752-337-41	s	IC CXK1206M
ICG26	8-759-917-87	s	IC 74F382PC
ICG27	8-759-917-87	s	IC 74F382PC
ICG28	8-759-906-76	s	IC 74F283PC
ICG29	8-759-906-76	s	IC 74F283PC
ICG30	8-752-304-30	s	IC CX23043
ICH1	8-759-946-38	s	IC SN74ALS574AN
ICH2	8-759-946-38	s	IC SN74ALS574AN
ICH3	8-759-705-99	s	IC WS57C291B-DPR15H3V1
ICH4	8-759-147-02	s	IC UPD42101C-3
ICH7	8-759-990-97	s	IC CXD8156Q
ICH10	8-759-990-97	s	IC CXD8156Q
ICH13	8-759-990-97	s	IC CXD8156Q
ICH16	8-759-990-97	s	IC CXD8156Q
ICH20	8-759-990-96	s	IC CXD8157Q
ICH24	8-759-990-96	s	IC CXD8157Q
ICH27	8-759-904-26	s	IC SN74ALS08N
ICH28	8-759-946-64	s	IC SN74ALS04BN
ICH29	8-759-904-38	s	IC SN74ALS32N
ICH30	8-752-304-30	s	IC CX23043
ICJ1	8-759-946-38	s	IC SN74ALS574AN
ICJ2	8-759-946-38	s	IC SN74ALS574AN
ICJ3	8-759-918-33	s	IC CX20160
ICJ4	8-759-918-33	s	IC CX20160
ICJ5	8-759-719-15	s	IC PEEL18CV8P-SAM001V1
ICJ7	8-759-990-97	s	IC CXD8156Q
ICJ10	8-759-990-97	s	IC CXD8156Q
ICJ13	8-759-990-97	s	IC CXD8156Q
ICJ16	8-759-990-97	s	IC CXD8156Q
ICJ20	8-759-990-97	s	IC CXD8156Q

(DPR-15 BOARD)

Ref. No. or Q'ty	Part No.	SP	Description
ICJ24	8-759-990-96	s	IC CXD8157Q
ICJ26	8-759-946-38	s	IC SN74ALS574AN
ICJ27	8-759-900-69	s	IC SN74ALS74AN
ICJ28	8-759-900-69	s	IC SN74ALS74AN
ICJ29	8-759-937-47	s	IC SN74ALS86N
ICJ30	8-752-304-30	s	IC CX23043
ICK26	8-759-946-38	s	IC SN74ALS574AN
ICK27	8-759-900-69	s	IC SN74ALS74AN
ICK28	8-759-900-69	s	IC SN74ALS74AN
RB1	1-231-525-00	s	RESISTOR BLOCK 4.7Kx4
RB2	1-231-385-00	s	RESISTOR BLOCK 4.7Kx8
RB3	1-231-525-00	s	RESISTOR BLOCK 4.7Kx4
RB4	1-231-525-00	s	RESISTOR BLOCK 4.7Kx4
RB5	1-231-501-00	s	RESISTOR BLOCK 470x4
RB6	1-231-401-00	s	RESISTOR BLOCK 470x8
RB7	1-231-385-00	s	RESISTOR BLOCK 4.7Kx8
RB8	1-231-525-00	s	RESISTOR BLOCK 4.7Kx4
RB9	1-231-502-00	s	RESISTOR BLOCK 510x4
RB10	1-231-402-11	s	RESISTOR BLOCK 510x8
S1	1-570-598-11	s	SWITCH, DIP 4-CKT
S2	1-554-027-00	s	SWITCH, DIGITAL
S3	1-554-027-00	s	SWITCH, DIGITAL
S4	1-554-027-00	s	SWITCH, DIGITAL
S5	1-554-027-00	s	SWITCH, DIGITAL
S6	1-570-623-11	s	SWITCH, DIP 8-CKT

Parts that are not listed in the "reference number order list" are shown in the "General Purpose Electrical Parts List".

DPR-16 BOARD

Ref. No. or Q'ty	Part No.	SP	Description
1pc	A-6259-461-A	o	MOUNTED CIRCIUT BOARD, DPR-16
1pc	1-526-654-00	s	SOCKET, IC (DP) 16P
1pc	1-526-656-00	s	SOCKET, IC (DP) 20P
5pcs	1-526-816-21	o	SOCKET, IC (DP) 24P
2pcs	3-166-184-01	o	LEVER, PC BOARD
6pcs	7-621-773-87	s	SCREW +B 2.6X10
2pcs	7-622-207-05	s	N 2.6, TYPE 2
2pcs	7-626-320-11	s	PIN, SPRING 3X8
8pcs	7-682-948-01	s	SCREW +PSW 3X8
C1	1-124-589-11	s	ELECT 47uF 20% 16V
CN1	1-506-748-11	s	CONNECTOR, DIN 96P, MALE
CN2	1-506-748-11	s	CONNECTOR, DIN 96P, MALE
CN3	1-506-748-11	s	CONNECTOR, DIN 96P, MALE
COP1	1-563-859-11	s	PLUG, SHORTING
COP2	1-563-859-11	s	PLUG, SHORTING
COP3	1-563-859-11	s	PLUG, SHORTING
COP4	1-563-859-11	s	PLUG, SHORTING
COP5	1-563-859-11	s	PLUG, SHORTING
COP6	1-563-859-11	s	PLUG, SHORTING
COP7	1-563-859-11	s	PLUG, SHORTING
COR1	1-566-388-11	s	CONNECTOR, 8P, MALE
COR2	1-566-388-11	s	CONNECTOR, 8P, MALE
COR3	1-565-396-11	o	PIN, CONNECTOR 10P
COR4	1-566-388-11	o	CONNECTOR, 8P, MALE
COR5	1-566-388-11	o	CONNECTOR, 8P, MALE
F1	1-576-031-11	s	FUSE, MICRO
F2	1-576-031-11	s	FUSE, MICRO
ICA3	8-759-946-38	s	IC SN74ALS574AN
ICA4	8-759-946-38	s	IC SN74ALS574AN
ICA6	8-759-990-97	s	IC CXD8156Q
ICA8	8-759-719-16	s	IC EPM5016-H24191BV1
ICA9	8-759-320-87	s	IC HM63021P-28
ICA11	8-759-918-33	s	IC CX20160
ICA13	8-759-990-97	s	IC CXD8156Q
ICA15	8-759-946-63	s	IC SN74ALS541N
ICA16	8-759-946-63	s	IC SN74ALS541N
ICA17	8-759-946-38	s	IC SN74ALS574AN
ICA18	8-759-946-63	s	IC SN74ALS541N
ICA20	8-752-337-41	s	IC CXK1206M
ICA23	8-752-337-41	s	IC CXK1206M
ICA26	8-759-990-97	s	IC CXD8156Q
ICA28	8-759-904-26	s	IC SN74ALS08N
ICA29	8-759-904-38	s	IC SN74ALS32N
ICA30	8-759-904-36	s	IC SN74ALS27N
ICA31	8-759-946-64	s	IC SN74ALS04BN
ICA32	8-759-936-54	s	IC SN74ALS175N
ICA33	8-752-304-30	s	IC CX23043
ICB2	8-759-946-38	s	IC SN74ALS574AN
ICB3	8-759-946-38	s	IC SN74ALS574AN
ICB4	8-759-946-38	s	IC SN74ALS574AN
ICB6	8-759-990-97	s	IC CXD8156Q
ICB8	8-759-918-33	s	IC CX20160
ICB11	8-759-918-33	s	IC CX20160
ICB13	8-759-990-97	s	IC CXD8156Q
ICB15	8-759-946-63	s	IC SN74ALS541N
ICB16	8-759-946-63	s	IC SN74ALS541N
ICB17	8-759-946-63	s	IC SN74ALS541N

(DPR-16 BOARD)

Ref. No. or Q'ty	Part No.	SP	Description
ICB18	8-759-946-38	s	IC SN74ALS574AN
ICB20	8-752-337-41	s	IC CXK1206M
ICB23	8-752-337-41	s	IC CXK1206M
ICB25	8-759-918-33	s	IC CX20160
ICB26	8-759-918-33	s	IC CX20160
ICB27	8-759-918-33	s	IC CX20160
ICB28	8-759-918-33	s	IC CX20160
ICB29	8-759-904-26	s	IC SN74ALS08N
ICB30	8-759-904-38	s	IC SN74ALS32N
ICB31	8-759-904-36	s	IC SN74ALS27N
ICB32	8-759-946-64	s	IC SN74ALS04BN
ICC8	8-759-989-55	s	IC SN74ALS244BN
ICC9	8-759-320-87	s	IC HM63021P-28
ICC20	8-752-337-41	s	IC CXK1206M
ICC23	8-752-337-41	s	IC CXK1206M
ICC29	8-759-904-18	s	IC SN74ALS00AN
ICC30	8-759-906-71	s	IC 74F175PC
ICC31	8-759-946-36	s	IC SN74ALS163BN
ICC32	8-759-904-18	s	IC SN74ALS00AN
ICD2	8-759-946-38	s	IC SN74ALS574AN
ICD3	8-759-936-60	s	IC SN74ALS273N
ICD4	8-759-946-38	s	IC SN74ALS574AN
ICD6	8-759-990-96	s	IC CXD8157Q
ICD11	8-759-946-38	s	IC SN74ALS574AN
ICD12	8-759-946-38	s	IC SN74ALS574AN
ICD13	8-759-946-38	s	IC SN74ALS574AN
ICD14	8-759-946-38	s	IC SN74ALS574AN
ICD15	8-759-946-38	s	IC SN74ALS574AN
ICD16	8-759-946-63	s	IC SN74ALS541N
ICD17	8-759-946-63	s	IC SN74ALS541N
ICD18	8-759-946-38	s	IC SN74ALS574AN
ICD20	8-752-337-41	s	IC CXK1206M
ICD23	8-752-337-41	s	IC CXK1206M
ICD26	8-759-990-97	s	IC CXD8156Q
ICD28	8-759-904-38	s	IC SN74ALS32N
ICD29	8-759-904-26	s	IC SN74ALS08N
ICD30	8-759-900-69	s	IC SN74ALS74AN
ICD31	8-759-946-64	s	IC SN74ALS04BN
ICD33	8-752-304-30	s	IC CX23043
ICE2	8-759-946-38	s	IC SN74ALS574AN
ICE3	8-759-989-61	s	IC SN74ALS564AN
ICE4	8-759-946-38	s	IC SN74ALS574AN
ICE6	8-759-906-76	s	IC 74F283PC
ICE7	8-759-906-76	s	IC 74F283PC
ICE8	8-759-946-38	s	IC SN74ALS574AN
ICE9	8-759-320-87	s	IC HM63021P-28
ICE11	8-759-946-38	s	IC SN74ALS574AN
ICE12	8-759-946-38	s	IC SN74ALS574AN
ICE13	8-759-946-38	s	IC SN74ALS574AN
ICE14	8-759-500-72	s	IC SN74ALS157AN
ICE16	8-759-990-97	s	IC CXD8156Q
ICE19	8-759-706-31	s	IC MB7112-DPR16E19V1
ICE25	8-752-322-06	s	IC CXK5814P-35
ICE26	8-752-322-06	s	IC CXK5814P-35
ICE27	8-759-948-21	s	IC V74ACT827PS
ICE28	8-759-948-19	s	IC V74ACT821PS
ICE29	8-759-948-21	s	IC V74ACT827PS
ICE30	8-759-948-19	s	IC V74ACT821PS

Parts that are not listed in the "reference number order list" are shown in the "General Purpose Electrical Parts List".

(DPR-16 BOARD)

Ref. No. or Q'ty	Part No.	SP	Description
ICE31	8-759-500-72	s	IC SN74ALS157AN
ICE32	8-759-500-72	s	IC SN74ALS157AN
ICE33	8-759-946-38	s	IC SN74ALS574AN
ICE34	8-759-901-64	s	IC SN74LS164N
ICE35	8-759-901-64	s	IC SN74LS164N
ICF2	8-759-904-77	s	IC AM26LS32ACN
ICF3	8-759-901-44	s	IC 74F240PC
ICF4	8-759-916-66	s	IC SN74HCT240N
ICF5	8-759-912-30	s	IC SN74ALS640AN
ICF6	8-759-906-76	s	IC 74F283PC
ICF7	8-759-906-76	s	IC 74F283PC
ICF8	8-759-916-54	s	IC SN74HC174N
ICF9	8-759-916-54	s	IC SN74HC174N
ICF10	8-759-901-44	s	IC 74F240PC
ICF11	8-759-946-38	s	IC SN74ALS574AN
ICF12	8-759-946-38	s	IC SN74ALS574AN
ICF13	8-759-946-38	s	IC SN74ALS574AN
ICF14	8-759-500-72	s	IC SN74ALS157AN
ICF15	8-759-202-84	s	IC SN74HC109N
ICF16	8-759-916-29	s	IC SN74HC74N
ICF20	8-759-901-44	s	IC 74F240PC
ICF21	8-759-946-38	s	IC SN74ALS574AN
ICF22	8-759-946-38	s	IC SN74ALS574AN
ICF23	8-759-912-36	s	IC SN74ALS645AN
ICF24	8-759-912-36	s	IC SN74ALS645AN
ICF31	8-759-916-01	s	IC SN74ALS153N
ICF32	8-759-916-01	s	IC SN74ALS153N
ICG2	8-759-916-66	s	IC SN74HCT240N
ICG3	8-759-946-38	s	IC SN74ALS574AN
ICG4	8-759-946-38	s	IC SN74ALS574AN
ICG5	8-759-946-38	s	IC SN74ALS574AN
ICG19	8-759-500-72	s	IC SN74ALS157AN
ICG20	8-759-912-05	s	IC SN74ALS161BN
ICG21	8-759-946-38	s	IC SN74ALS574AN
ICG22	8-759-946-38	s	IC SN74ALS574AN
ICG23	8-759-912-36	s	IC SN74ALS645AN
ICG24	8-759-912-36	s	IC SN74ALS645AN
ICG25	8-752-322-06	s	IC CXK5814P-35
ICG26	8-752-322-06	s	IC CXK5814P-35
ICG27	8-759-948-21	s	IC V74ACT827PS
ICG28	8-759-948-19	s	IC V74ACT821PS
ICG29	8-759-948-21	s	IC V74ACT827PS
ICG30	8-759-948-19	s	IC V74ACT821PS
ICG31	8-759-006-22	s	IC SN74LS283N
ICG32	8-759-901-64	s	IC SN74LS164N
ICG33	8-759-948-28	s	IC SM5828P
ICG35	8-759-726-81	s	IC PEEL18CV8-CNT5V1
ICH1	8-759-916-66	s	IC SN74HCT240N
ICH2	8-759-916-66	s	IC SN74HCT240N
ICH3	8-759-946-38	s	IC SN74ALS574AN
ICH4	8-759-946-38	s	IC SN74ALS574AN
ICH5	8-759-918-33	s	IC CX20160
ICH7	8-759-990-96	s	IC CXD8157Q
ICH9	8-759-990-96	s	IC CXD8157Q
ICH13	8-759-990-97	s	IC CXD8156Q
ICH16	8-752-337-41	s	IC CXK1206M
ICH18	8-752-337-41	s	IC CXK1206M
ICH20	8-759-946-38	s	IC SN74ALS574AN

(DPR-16 BOARD)

Ref. No. or Q'ty	Part No.	SP	Description
ICH21	8-759-500-72	s	IC SN74ALS157AN
ICH22	8-759-500-72	s	IC SN74ALS157AN
ICH24	8-752-337-41	s	IC CXK1206M
ICH27	8-752-337-41	s	IC CXK1206M
ICH29	8-759-918-33	s	IC CX20160
ICH30	8-759-918-33	s	IC CX20160
ICH31	8-759-946-64	s	IC SN74ALS04BN
ICH32	8-752-304-30	s	IC CX23043
ICH33	8-752-304-30	s	IC CX23043
ICJ6	8-759-936-60	s	IC SN74ALS273N
ICJ7	8-759-918-33	s	IC CX20160
ICJ8	8-759-912-12	s	IC SN74ALS240AN
ICJ9	8-759-946-38	s	IC SN74ALS574AN
ICJ10	8-759-946-38	s	IC SN74ALS574AN
ICJ11	8-759-917-06	s	IC SN74HC574N
ICJ12	8-759-917-06	s	IC SN74HC574N
ICJ13	8-759-948-19	s	IC V74ACT821PS
ICJ15	8-752-337-41	s	IC CXK1206M
ICJ18	8-752-337-41	s	IC CXK1206M
ICJ20	8-759-989-55	s	IC SN74ALS244BN
ICJ21	8-759-500-72	s	IC SN74ALS157AN
ICJ22	8-759-500-72	s	IC SN74ALS157AN
ICK1	8-759-916-42	s	IC SN74HC133N
ICK2	8-759-916-66	s	IC SN74HCT240N
ICK3	8-759-946-38	s	IC SN74ALS574AN
ICK4	8-759-918-33	s	IC CX20160
ICK5	8-759-916-66	s	IC SN74HCT240N
ICK7	8-759-990-97	s	IC CXD8156Q
ICK9	8-759-990-97	s	IC CXD8156Q
ICK12	8-759-917-06	s	IC SN74HC574N
ICK13	8-759-917-06	s	IC SN74HC574N
ICK14	8-759-917-06	s	IC SN74HC574N
ICK15	8-759-917-06	s	IC SN74HC574N
ICK16	8-759-918-33	s	IC CX20160
ICK17	8-759-918-33	s	IC CX20160
ICK18	8-759-946-38	s	IC SN74ALS574AN
ICK19	8-759-946-38	s	IC SN74ALS574AN
ICK20	8-759-912-12	s	IC SN74ALS240AN
ICK21	8-759-917-06	s	IC SN74HC574N
ICK22	8-759-916-29	s	IC SN74HC74N
ICK24	8-752-337-41	s	IC CXK1206M
ICK27	8-752-337-41	s	IC CXK1206M
ICK30	8-759-990-97	s	IC CXD8156Q
ICK32	8-759-946-38	s	IC SN74ALS574AN
ICK33	8-752-304-30	s	IC CX23043
ICL1	8-759-916-42	s	IC SN74HC133N
ICL2	8-759-916-42	s	IC SN74HC133N
ICL3	8-759-916-18	s	IC SN74HC10N
ICL5	8-759-917-43	s	IC SN74HC138N
ICL22	8-759-904-26	s	IC SN74ALS08N
ICL32	8-759-705-85	s	IC WS57C291B-DPR16L32V1
ICL33	8-759-706-25	s	IC AT27HC642-DPR16L33V1
ICM1	8-759-916-14	s	IC SN74HC04N
ICM3	8-759-904-38	s	IC SN74ALS32N
ICM4	8-759-803-70	s	IC SN74HC08N
ICM5	8-759-917-43	s	IC SN74HC138N
ICM7	8-759-990-97	s	IC CXD8156Q

Parts that are not listed in the "reference number order list" are shown in the "General Purpose Electrical Parts List".

(DPR-16 BOARD)

Ref. No. or Q'ty	Part No.	SP	Description
ICM9	8-759-990-97	s	IC CXD8156Q
ICM12	8-759-917-06	s	IC SN74HC574N
ICM13	8-759-917-06	s	IC SN74HC574N
ICM14	8-759-918-33	s	IC CX20160
ICM15	8-759-918-33	s	IC CX20160
ICM16	8-759-706-10	s	IC WS57C291B-DPR16M16V1
ICM17	8-759-706-11	s	IC WS57C291B-DPR16M17V1
ICM19	8-759-990-96	s	IC CXD8157Q
ICM21	8-759-989-55	s	IC SN74ALS244BN
ICM22	8-759-936-54	s	IC SN74ALS175N
ICM23	8-759-917-06	s	IC SN74HC574N
ICM24	8-759-948-19	s	IC V74ACT821PS
ICM25	8-752-304-30	s	IC CX23043
ICM26	8-759-948-19	s	IC V74ACT821PS
ICM27	8-752-304-30	s	IC CX23043
ICM29	8-759-948-19	s	IC V74ACT821PS
ICM30	8-759-948-19	s	IC V74ACT821PS
ICM31	8-759-948-19	s	IC V74ACT821PS
ICM32	8-759-705-84	s	IC WS57C291B-DPR16M32V1
RB1	1-231-385-00	s	RESISTOR BLOCK 4.7Kx8
RB2	1-231-399-00	s	RESISTOR BLOCK 330x8
RB3	1-231-399-00	s	RESISTOR BLOCK 330x8
RB4	1-231-525-00	s	RESISTOR BLOCK 4.7Kx4
RB5	1-231-525-00	s	RESISTOR BLOCK 4.7Kx4
RB6	1-231-525-00	s	RESISTOR BLOCK 4.7Kx4
RB7	1-231-525-00	s	RESISTOR BLOCK 4.7Kx4
RB8	1-231-525-00	s	RESISTOR BLOCK 4.7Kx4
RB9	1-231-525-00	s	RESISTOR BLOCK 4.7Kx4
RB10	1-231-525-00	s	RESISTOR BLOCK 4.7Kx4
RB11	1-231-525-00	s	RESISTOR BLOCK 4.7Kx4
RB12	1-231-385-00	s	RESISTOR BLOCK 4.7Kx8
RB13	1-231-525-00	s	RESISTOR BLOCK 4.7Kx4
RB14	1-231-385-00	s	RESISTOR BLOCK 4.7Kx8
RB15	1-231-405-00	s	RESISTOR BLOCK 1K
RB16	1-231-385-00	s	RESISTOR BLOCK 4.7Kx8
RB17	1-231-525-00	s	RESISTOR BLOCK 4.7Kx4
S1	1-554-027-00	s	SWITCH, DIGITAL
S2	1-554-027-00	s	SWITCH, DIGITAL
S3	1-554-027-00	s	SWITCH, DIGITAL
S4	1-554-027-00	s	SWITCH, DIGITAL
S5	1-554-027-00	s	SWITCH, DIGITAL
S6	1-554-027-00	s	SWITCH, DIGITAL
S7	1-570-598-11	s	SWITCH, DIP 4-CKT
S8	1-554-027-00	s	SWITCH, DIGITAL
S9	1-554-027-00	s	SWITCH, DIGITAL
S10	1-554-027-00	s	SWITCH, DIGITAL
S11	1-554-027-00	s	SWITCH, DIGITAL
S12	1-554-027-00	s	SWITCH, DIGITAL
S13	1-554-027-00	s	SWITCH, DIGITAL

Parts that are not listed in the "reference number order list" are shown in the "General Purpose Electrical Parts List".

DPR-17 BOARD

Ref. No. or Q'ty	Part No.	SP	Description
1pc	A-6259-457-A	o	MOUNTED CIRCIUT BOARD, DPR-17
3pcs	1-526-816-21	o	SOCKET, IC (DP) 24P
2pcs	3-166-184-01	o	LEVER, PC BOARD
6pcs	7-621-773-87	s	SCREW +B 2.6X10
2pcs	7-622-207-05	s	N 2.6, TYPE 2
2pcs	7-626-320-11	s	PIN, SPRING 3X8
8pcs	7-682-948-01	s	SCREW +PSW 3X8
C1	1-124-589-11	s	ELECT 47uF 20% 16V
C97	1-162-294-31	s	CERAMIC 0.001uF 10% 50V
CN1	1-506-748-11	s	CONNECTOR, DIN 96P, MALE
CN2	1-506-748-11	s	CONNECTOR, DIN 96P, MALE
CN3	1-506-748-11	s	CONNECTOR, DIN 96P, MALE
COP1	1-563-859-11	s	PLUG, SHORTING
COP2	1-563-859-11	s	PLUG, SHORTING
COP3	1-563-859-11	s	PLUG, SHORTING
COR1	1-566-388-11	s	CONNECTOR, 8P, MALE
COR2	1-566-388-11	s	CONNECTOR, 8P, MALE
COR3	1-566-388-11	s	CONNECTOR, 8P, MALE
DL1	1-415-167-00	s	DELAY LINE
F1	1-576-031-11	s	FUSE, MICRO
F2	1-576-031-11	s	FUSE, MICRO
ICA1	8-759-948-19	s	IC V74ACT821PS
ICA2	8-759-913-63	s	IC SN74ALS374N
ICA3	8-759-913-63	s	IC SN74ALS374N
ICA4	8-759-921-69	s	IC SN74HC688N
ICA5	8-759-921-69	s	IC SN74HC688N
ICA6	8-759-917-43	s	IC SN74HC138N
ICA7	8-759-913-63	s	IC SN74ALS374N
ICA8	8-759-913-63	s	IC SN74ALS374N
ICA9	8-759-918-33	s	IC CX20160
ICB1	8-759-916-66	s	IC SN74HCT240N
ICB2	8-759-916-66	s	IC SN74HCT240N
ICB3	8-759-902-44	s	IC SN74LS244N
ICB4	8-759-902-44	s	IC SN74LS244N
ICB5	8-759-902-44	s	IC SN74LS244N
ICB6	8-759-946-36	s	IC SN74ALS163BN
ICB7	8-759-946-36	s	IC SN74ALS163BN
ICB8	8-759-006-22	s	IC SN74LS283N
ICB9	8-759-912-03	s	IC SN74ALS138N
ICB10	8-759-904-87	s	IC 74F374PC
ICB11	8-759-948-19	s	IC V74ACT821PS
ICB12	8-759-948-21	s	IC V74ACT827PS
ICB13	8-759-948-19	s	IC V74ACT821PS
ICB14	8-759-948-21	s	IC V74ACT827PS
ICB16	8-759-906-78	s	IC 74F399PC
ICB17	8-759-904-87	s	IC 74F374PC
ICB18	8-759-327-74	s	IC CXK58258SP-35
ICB19	8-759-327-74	s	IC CXK58258SP-35
ICC1	8-759-906-78	s	IC 74F399PC
ICC2	8-759-906-78	s	IC 74F399PC
ICC3	8-759-906-78	s	IC 74F399PC
ICC4	8-759-906-78	s	IC 74F399PC
ICC5	8-759-906-78	s	IC 74F399PC
ICC6	8-759-906-78	s	IC 74F399PC
ICC7	8-759-906-78	s	IC 74F399PC

(DPR-17 BOARD)

Ref. No. or Q'ty	Part No.	SP	Description
ICC8	8-759-915-41	s	IC 74F02PC
ICC10	8-759-938-94	s	IC 74F158APC
ICC11	8-752-304-30	s	IC CX23043
ICC12	8-752-304-30	s	IC CX23043
ICC13	8-752-304-30	s	IC CX23043
ICC14	8-752-304-30	s	IC CX23043
ICC16	8-759-906-78	s	IC 74F399PC
ICC17	8-759-912-03	s	IC SN74ALS138N
ICC18	8-759-327-74	s	IC CXK58258SP-35
ICC19	8-759-327-74	s	IC CXK58258SP-35
ICD1	8-759-904-77	s	IC AM26LS32ACN
ICD2	8-759-904-87	s	IC 74F374PC
ICD3	8-759-904-80	s	IC 74F04PC
ICD4	8-759-906-78	s	IC 74F399PC
ICD5	8-759-906-78	s	IC 74F399PC
ICD6	8-759-906-78	s	IC 74F399PC
ICD7	8-759-906-78	s	IC 74F399PC
ICD8	8-759-904-79	s	IC 74F00PC
ICD9	8-759-904-80	s	IC 74F04PC
ICD10	8-759-915-93	s	IC 74F163APC
ICD11	8-759-948-19	s	IC V74ACT821PS
ICD12	8-759-705-86	s	IC WS57C291B-DPR17D12V1
ICD13	8-759-948-19	s	IC V74ACT821PS
ICD14	8-759-705-87	s	IC WS57C291B-DPR17D14V1
ICD15	8-759-904-80	s	IC 74F04PC
ICD16	8-759-906-78	s	IC 74F399PC
ICD17	8-759-904-87	s	IC 74F374PC
ICD19	8-759-327-74	s	IC CXK58258SP-35
ICE1	8-759-906-78	s	IC 74F399PC
ICE2	8-759-906-78	s	IC 74F399PC
ICE3	8-759-906-78	s	IC 74F399PC
ICE4	8-759-906-78	s	IC 74F399PC
ICE5	8-759-906-78	s	IC 74F399PC
ICE6	8-759-906-78	s	IC 74F399PC
ICE7	8-759-906-78	s	IC 74F399PC
ICE8	8-759-904-79	s	IC 74F00PC
ICE9	8-759-904-83	s	IC 74F32PC
ICE12	8-759-916-96	s	IC SN74HC374N
ICE15	8-759-906-78	s	IC 74F399PC
ICE16	8-759-906-78	s	IC 74F399PC
ICE17	8-759-904-87	s	IC 74F374PC
ICE18	8-759-912-48	s	IC SN74ALS874NT
ICE19	8-759-912-48	s	IC SN74ALS874NT
ICF1	8-759-906-78	s	IC 74F399PC
ICF2	8-759-906-78	s	IC 74F399PC
ICF3	8-759-906-78	s	IC 74F399PC
ICF4	8-759-906-78	s	IC 74F399PC
ICF5	8-759-916-25	s	IC SN74HC32N
ICF6	8-759-904-79	s	IC 74F00PC
ICF7	8-759-904-84	s	IC 74F74PC
ICF8	8-759-946-64	s	IC SN74ALS04BN
ICF9	8-759-916-14	s	IC SN74HC04N
ICF10	8-759-906-66	s	IC 74F86PC
ICF12	8-759-803-70	s	IC SN74HC08N
ICF13	8-759-901-64	s	IC SN74LS164N
ICF16	8-759-906-78	s	IC 74F399PC
ICF17	8-759-904-87	s	IC 74F374PC
ICF18	8-759-327-74	s	IC CXK58258SP-35

(DPR-17 BOARD)

Ref. No. or Q'ty	Part No.	SP	Description
ICF19	8-759-327-74	s	IC CXK58258SP-35
ICG1	8-759-906-78	s	IC 74F399PC
ICG2	8-759-906-78	s	IC 74F399PC
ICG3	8-759-906-78	s	IC 74F399PC
ICG4	8-759-906-78	s	IC 74F399PC
ICG5	8-759-906-78	s	IC 74F399PC
ICG6	8-759-906-78	s	IC 74F399PC
ICG7	8-759-906-78	s	IC 74F399PC
ICG8	8-759-906-76	s	IC 74F283PC
ICG9	8-759-906-76	s	IC 74F283PC
ICG10	8-759-906-76	s	IC 74F283PC
ICG11	8-759-906-76	s	IC 74F283PC
ICG12	8-759-906-76	s	IC 74F283PC
ICG13	8-759-906-78	s	IC 74F399PC
ICG14	8-759-906-78	s	IC 74F399PC
ICG16	8-759-906-78	s	IC 74F399PC
ICG17	8-759-912-03	s	IC SN74ALS138N
ICG18	8-759-327-74	s	IC CXK58258SP-35
ICG19	8-759-327-74	s	IC CXK58258SP-35
ICH1	8-759-906-78	s	IC 74F399PC
ICH2	8-759-906-78	s	IC 74F399PC
ICH3	8-759-906-78	s	IC 74F399PC
ICH4	8-759-906-78	s	IC 74F399PC
ICH5	8-759-948-19	s	IC V74ACT821PS
ICH6	8-759-904-81	s	IC 74F08PC
ICH7	8-759-906-76	s	IC 74F283PC
ICH8	8-759-906-76	s	IC 74F283PC
ICH9	8-759-904-87	s	IC 74F374PC
ICH10	8-759-912-03	s	IC SN74ALS138N
ICH11	8-759-904-87	s	IC 74F374PC
ICH12	8-759-904-87	s	IC 74F374PC
ICH13	8-759-906-78	s	IC 74F399PC
ICH14	8-759-906-78	s	IC 74F399PC
ICH15	8-759-906-78	s	IC 74F399PC
ICH16	8-759-906-78	s	IC 74F399PC
ICH17	8-759-904-87	s	IC 74F374PC
ICH18	8-759-327-74	s	IC CXK58258SP-35
ICJ1	8-759-913-63	s	IC SN74ALS374N
ICJ2	8-759-904-87	s	IC 74F374PC
ICJ3	8-759-916-01	s	IC SN74ALS153N
ICJ4	8-759-916-01	s	IC SN74ALS153N
ICJ5	8-759-913-63	s	IC SN74ALS374N
ICJ6	8-759-912-48	s	IC SN74ALS874NT
ICJ7	8-759-912-48	s	IC SN74ALS874NT
ICJ8	8-759-948-19	s	IC V74ACT821PS
ICJ9	8-759-327-74	s	IC CXK58258SP-35
ICJ10	8-759-327-74	s	IC CXK58258SP-35
ICJ12	8-759-327-74	s	IC CXK58258SP-35
ICJ13	8-759-327-74	s	IC CXK58258SP-35
ICJ14	8-759-327-74	s	IC CXK58258SP-35
ICJ15	8-759-906-78	s	IC 74F399PC
ICJ16	8-759-906-78	s	IC 74F399PC
ICJ17	8-759-904-87	s	IC 74F374PC
ICJ18	8-759-912-48	s	IC SN74ALS874NT
ICJ19	8-759-912-48	s	IC SN74ALS874NT
ICJ20	8-759-706-26	s	IC AT27HC642-DPR17J20V1
R3	1-215-397-00	s	METAL 100 1% 1/6W

Parts that are not listed in the "reference number order list" are shown in the "General Purpose Electrical Parts List".

(DPR-17 BOARD)

Ref. No. or Q'ty	Part No.	SP	Description
RB1	1-231-410-00	s	RESISTOR BLOCK 10Kx8
RB2	1-231-533-00	s	RESISTOR BLOCK 10Kx4
RB3	1-231-410-00	s	RESISTOR BLOCK 10Kx8
RB4	1-231-533-00	s	RESISTOR BLOCK 10Kx4
S1	1-554-027-00	s	SWITCH, DIGITAL
S2	1-554-027-00	s	SWITCH, DIGITAL
S3	1-554-027-00	s	SWITCH, DIGITAL
S4	1-554-027-00	s	SWITCH, DIGITAL
S5	1-554-027-00	s	SWITCH, DIGITAL
S6	1-554-027-00	s	SWITCH, DIGITAL
S7	1-570-602-11	s	SWITCH, DIP 2-CKT

DPR-18 BOARD

Ref. No. or Q'ty	Part No.	SP	Description
1pc	A-6259-456-A	o	MOUNTED CIRCIUT BOARD, DPR-18
2pcs	1-526-659-00	s	SOCKET, IC (DP) 28P
4pcs	1-526-816-21	o	SOCKET, IC (DP) 24P
2pcs	3-166-184-01	o	LEVER, PC BOARD
6pcs	7-621-773-87	s	SCREW +B 2.6X10
2pcs	7-622-207-05	s	N 2.6, TYPE 2
2pcs	7-626-320-11	s	PIN, SPRING 3X8
8pcs	7-682-948-01	s	SCREW +PSW 3X8
C1	1-124-589-11	s	ELECT 47uF 20% 16V
CN1	1-506-748-11	s	CONNECTOR, DIN 96P, MALE
CN2	1-506-748-11	s	CONNECTOR, DIN 96P, MALE
CN3	1-506-748-11	s	CONNECTOR, DIN 96P, MALE
COP1	1-563-859-11	s	PLUG, SHORTING
COR2	1-566-388-11	s	CONNECTOR, 8P, MALE
F1	1-576-031-11	s	FUSE, MICRO
F2	1-576-031-11	s	FUSE, MICRO
ICA1	8-759-904-87	s	IC 74F374PC
ICA2	8-759-904-87	s	IC 74F374PC
ICA3	8-759-900-69	s	IC SN74ALS74AN
ICA4	8-759-906-76	s	IC 74F283PC
ICA5	8-759-906-76	s	IC 74F283PC
ICA7	8-759-990-97	s	IC CXD8156Q
ICA9	8-759-942-67	s	IC L29C520PC
ICA10	8-759-942-67	s	IC L29C520PC
ICA11	8-759-904-81	s	IC 74F08PC
ICA12	8-759-946-36	s	IC SN74ALS163BN
ICA13	8-759-946-36	s	IC SN74ALS163BN
ICA14	8-759-946-36	s	IC SN74ALS163BN
ICA15	8-759-942-67	s	IC L29C520PC
ICA16	8-759-916-54	s	IC SN74HC174N
ICA17	8-759-948-19	s	IC V74ACT821PS
ICA18	8-759-948-21	s	IC V74ACT827PS
ICA20	8-752-304-30	s	IC CX23043
ICA21	8-752-304-30	s	IC CX23043
ICA23	8-759-990-97	s	IC CXD8156Q
ICB1	8-759-904-87	s	IC 74F374PC
ICB2	8-759-904-87	s	IC 74F374PC
ICB3	8-759-904-18	s	IC SN74ALS00AN
ICB4	8-759-906-76	s	IC 74F283PC
ICB5	8-759-906-76	s	IC 74F283PC
ICB9	8-759-916-54	s	IC SN74HC174N
ICB10	8-759-916-54	s	IC SN74HC174N
ICB11	8-759-001-87	s	IC 74F20PC
ICB12	8-759-914-96	s	IC N74F85N
ICB13	8-759-914-96	s	IC N74F85N
ICB14	8-759-914-96	s	IC N74F85N
ICB15	8-759-942-67	s	IC L29C520PC
ICB16	8-759-916-54	s	IC SN74HC174N
ICB17	8-759-948-19	s	IC V74ACT821PS
ICB18	8-759-948-21	s	IC V74ACT827PS
ICB19	8-759-916-14	s	IC SN74HC04N
ICB20	8-759-918-33	s	IC CX20160
ICB21	8-759-917-43	s	IC SN74HC138N
ICC1	8-759-904-87	s	IC 74F374PC
ICC2	8-759-904-87	s	IC 74F374PC

Parts that are not listed in the "reference number order list" are shown in the "General Purpose Electrical Parts List".

(DPR-18 BOARD)

Ref. No. or Q'ty	Part No.	SP	Description
ICC3	8-759-946-64	s	IC SN74ALS04BN
ICC4	8-759-906-76	s	IC 74F283PC
ICC5	8-759-906-76	s	IC 74F283PC
ICC7	8-759-990-97	s	IC CXD8156Q
ICC9	8-759-942-67	s	IC L29C520PC
ICC10	8-759-942-67	s	IC L29C520PC
ICC12	8-759-946-36	s	IC SN74ALS163BN
ICC13	8-759-946-36	s	IC SN74ALS163BN
ICC14	8-759-946-36	s	IC SN74ALS163BN
ICC15	8-759-942-67	s	IC L29C520PC
ICC16	8-759-916-54	s	IC SN74HC174N
ICC17	8-759-904-38	s	IC SN74ALS32N
ICC18	8-759-917-43	s	IC SN74HC138N
ICC19	8-759-917-43	s	IC SN74HC138N
ICC20	8-759-917-43	s	IC SN74HC138N
ICC21	8-759-917-43	s	IC SN74HC138N
ICC22	8-759-916-96	s	IC SN74HC374N
ICC23	8-759-916-96	s	IC SN74HC374N
ICC24	8-759-904-87	s	IC 74F374PC
ICC25	8-759-904-87	s	IC 74F374PC
ICD1	8-759-904-77	s	IC AM26LS32ACN
ICD2	8-759-902-44	s	IC SN74LS244N
ICD3	8-759-921-69	s	IC SN74HC688N
ICD4	8-759-921-69	s	IC SN74HC688N
ICD5	8-759-904-80	s	IC 74F04PC
ICD9	8-759-916-54	s	IC SN74HC174N
ICD10	8-759-916-54	s	IC SN74HC174N
ICD12	8-759-914-96	s	IC N74F85N
ICD13	8-759-914-96	s	IC N74F85N
ICD14	8-759-914-96	s	IC N74F85N
ICD15	8-759-942-67	s	IC L29C520PC
ICD16	8-759-916-54	s	IC SN74HC174N
ICD17	8-759-803-70	s	IC SN74HC08N
ICD18	8-759-904-80	s	IC 74F04PC
ICD19	8-759-904-87	s	IC 74F374PC
ICD20	8-759-002-00	s	IC MC74F153N
ICD21	8-759-906-66	s	IC 74F86PC
ICD22	8-759-948-19	s	IC V74ACT821PS
ICE1	8-759-916-66	s	IC SN74HCT240N
ICE2	8-759-902-44	s	IC SN74LS244N
ICE3	8-759-913-63	s	IC SN74ALS374N
ICE4	8-759-913-63	s	IC SN74ALS374N
ICE5	8-759-946-64	s	IC SN74ALS04BN
ICE6	8-759-914-96	s	IC N74F85N
ICE7	8-759-916-54	s	IC SN74HC174N
ICE8	8-759-906-66	s	IC 74F86PC
ICE9	8-759-914-96	s	IC N74F85N
ICE10	8-759-914-96	s	IC N74F85N
ICE11	8-759-914-96	s	IC N74F85N
ICE13	8-759-948-19	s	IC V74ACT821PS
ICE14	8-759-706-28	s	IC AT27HC642-DPR18E14V1
ICE15	8-759-948-21	s	IC V74ACT827PS
ICE16	8-759-916-71	s	IC SN74HC244N
ICE17	8-759-913-63	s	IC SN74ALS374N
ICE18	8-759-913-63	s	IC SN74ALS374N
ICE19	8-759-987-11	s	IC SN74ALS575ANT
ICE20	8-759-936-60	s	IC SN74ALS273N
ICE21	8-759-500-72	s	IC SN74ALS157AN

(DPR-18 BOARD)

Ref. No. or Q'ty	Part No.	SP	Description
ICF1	8-759-916-66	s	IC SN74HCT240N
ICF2	8-759-902-44	s	IC SN74LS244N
ICF3	8-759-913-63	s	IC SN74ALS374N
ICF4	8-759-913-63	s	IC SN74ALS374N
ICF5	8-759-914-96	s	IC N74F85N
ICF6	8-759-914-96	s	IC N74F85N
ICF7	8-759-916-54	s	IC SN74HC174N
ICF8	8-759-904-81	s	IC 74F08PC
ICF11	8-759-990-97	s	IC CXD8156Q
ICF13	8-759-938-44	s	IC SN74ALS688N
ICF14	8-759-706-27	s	IC AT27HC642-DPR18F14V1
ICF16	8-759-916-71	s	IC SN74HC244N
ICF17	8-759-913-63	s	IC SN74ALS374N
ICF18	8-759-913-63	s	IC SN74ALS374N
ICF19	8-759-987-11	s	IC SN74ALS575ANT
ICF20	8-759-936-60	s	IC SN74ALS273N
ICF21	8-759-500-72	s	IC SN74ALS157AN
ICF24	8-759-990-97	s	IC CXD8156Q
ICG1	8-759-948-19	s	IC V74ACT821PS
ICG2	8-759-937-47	s	IC SN74ALS86N
ICG3	8-759-913-63	s	IC SN74ALS374N
ICG4	8-759-913-63	s	IC SN74ALS374N
ICG5	8-759-916-14	s	IC SN74HC04N
ICG6	8-759-914-96	s	IC N74F85N
ICG7	8-759-916-54	s	IC SN74HC174N
ICG8	8-759-904-87	s	IC 74F374PC
ICG9	8-759-914-96	s	IC N74F85N
ICG10	8-759-914-96	s	IC N74F85N
ICG11	8-759-914-96	s	IC N74F85N
ICG13	8-759-948-19	s	IC V74ACT821PS
ICG14	8-759-707-72	s	IC AT27HC642-DPR18G14V1
ICG15	8-759-948-21	s	IC V74ACT827PS
ICG16	8-759-904-79	s	IC 74F00PC
ICG17	8-759-913-63	s	IC SN74ALS374N
ICG18	8-759-913-63	s	IC SN74ALS374N
ICG19	8-759-987-11	s	IC SN74ALS575ANT
ICG20	8-759-936-60	s	IC SN74ALS273N
ICG21	8-759-500-72	s	IC SN74ALS157AN
ICG22	8-752-304-30	s	IC CX23043
ICG24	8-752-304-30	s	IC CX23043
ICG26	8-759-948-19	s	IC V74ACT821PS
ICH0	8-759-913-63	s	IC SN74ALS374N
ICH1	8-759-948-19	s	IC V74ACT821PS
ICH2	8-759-937-47	s	IC SN74ALS86N
ICH3	8-759-913-63	s	IC SN74ALS374N
ICH4	8-759-913-63	s	IC SN74ALS374N
ICH5	8-759-914-96	s	IC N74F85N
ICH6	8-759-914-96	s	IC N74F85N
ICH7	8-759-916-54	s	IC SN74HC174N
ICH8	8-759-948-28	s	IC SM5828P
ICH11	8-759-990-97	s	IC CXD8156Q
ICH13	8-759-938-44	s	IC SN74ALS688N
ICH14	8-759-707-73	s	IC AT27HC642-DPR18H14V1
ICH15	8-759-921-08	s	IC SN74HC02N
ICH16	8-759-904-80	s	IC 74F04PC
ICH17	8-759-913-63	s	IC SN74ALS374N
ICH18	8-759-913-63	s	IC SN74ALS374N
ICH19	8-759-987-11	s	IC SN74ALS575ANT

Parts that are not listed in the "reference number order list" are shown in the "General Purpose Electrical Parts List".

(DPR-18 BOARD)

Ref. No. or Q'ty	Part No.	SP	Description
ICH20	8-759-936-60	s	IC SN74ALS273N
ICH21	8-759-916-54	s	IC SN74HC174N
ICH22	8-759-916-79	s	IC SN74HC273N
ICH23	8-759-916-96	s	IC SN74HC374N
ICH24	8-759-916-54	s	IC SN74HC174N
ICH26	8-759-948-28	s	IC SM5828P
RB1	1-231-533-00	s	RESISTOR BLOCK 10Kx4
RB2	1-231-410-00	s	RESISTOR BLOCK 10Kx8
RB3	1-231-410-00	s	RESISTOR BLOCK 10Kx8
S1	1-554-027-00	s	SWITCH, DIGITAL
S2	1-554-027-00	s	SWITCH, DIGITAL
S3	1-554-027-00	s	SWITCH, DIGITAL
S4	1-554-027-00	s	SWITCH, DIGITAL
S5	1-554-027-00	s	SWITCH, DIGITAL
S6	1-554-027-00	s	SWITCH, DIGITAL
S7	1-554-027-00	s	SWITCH, DIGITAL
S8	1-570-602-11	s	SWITCH, DIP 2-CKT

EX-270 BOARD

Ref. No. or Q'ty	Part No.	SP	Description
1pc	A-6279-735-A	s	EX-270 ASSY
1pc	A-6279-728-A	o	RAIL (R) ASSY
1pc	A-6279-729-A	o	RAIL (L) ASSY
2pcs	3-701-439-21	s	WASHER
2pcs	3-166-847-01	o	BRACKET, PC BOARD LEVER
2pcs	3-166-184-01	o	LEVER, PC BOARD
4pcs	3-167-578-01	s	NUT, PLATE
2pcs	3-167-579-01	o	BRACKET, PC BOARD LEVER
1pc	3-167-586-01	o	PLATE, SHIELD
12pcs	7-621-773-87	s	SCREW +B 2.6X10
4pcs	7-622-207-05	s	N 2.6, TYPE 2
2pcs	7-624-105-04	s	STOP RING 2.3, TYPE-E
2pcs	7-626-320-11	s	PIN, SPRING 3X8
6pcs	7-682-903-01	s	SCREW +PWH 3X5
16pcs	7-682-948-01	s	SCREW +PSW 3X8
CN1	1-506-748-11	s	CONNECTOR, DIN 96P, MALE
CN2	1-506-748-11	s	CONNECTOR, DIN 96P, MALE
CN3	1-506-748-11	s	CONNECTOR, DIN 96P, MALE
CN4	1-563-341-11	s	CONNECTOR, DIN 96P, FEMALE
CN5	1-563-341-11	s	CONNECTOR, DIN 96P, FEMALE
CN6	1-563-341-11	s	CONNECTOR, DIN 96P, FEMALE

LE-76 BOARD

Ref. No. or Q'ty	Part No.	SP	Description
1pc	1-631-489-11	o	PC BOARD, LE-76
D1	8-719-920-05	s	DIODE TLG123A
D2	8-719-920-05	s	DIODE TLG123A
D3	8-719-920-05	s	DIODE TLG123A
D4	8-719-920-05	s	DIODE TLG123A

Parts that are not listed in the "reference number order list" are shown in the "General Purpose Electrical Parts List".

MB-305 BOARD

Ref. No. or Q'ty	Part No.	SP	Description
5pcs	1-580-355-11	o	HOUSING, CONNECTOR 96P
98pcs	7-622-207-05	s	N 2.6, TYPE 2
98pcs	7-628-254-20	s	SCREW +PS 2.6X8
CN1	1-563-337-11	s	CONNECTOR, DIN 96P, FEMALE
CN2	1-563-337-11	s	CONNECTOR, DIN 96P, FEMALE
CN3	1-580-299-11	o	CONNECTOR, DIN 96P
CN4	1-563-337-11	s	CONNECTOR, DIN 96P, FEMALE
CN5	1-563-337-11	s	CONNECTOR, DIN 96P, FEMALE
CN6	1-580-299-11	o	CONNECTOR, DIN 96P
CN7	1-563-337-11	s	CONNECTOR, DIN 96P, FEMALE
CN8	1-563-337-11	s	CONNECTOR, DIN 96P, FEMALE
CN9	1-580-299-11	o	CONNECTOR, DIN 96P
CN10	1-563-337-11	s	CONNECTOR, DIN 96P, FEMALE
CN11	1-563-337-11	s	CONNECTOR, DIN 96P, FEMALE
CN12	1-563-337-11	s	CONNECTOR, DIN 96P, FEMALE
CN13	1-563-337-11	s	CONNECTOR, DIN 96P, FEMALE
CN14	1-563-337-11	s	CONNECTOR, DIN 96P, FEMALE
CN15	1-563-337-11	s	CONNECTOR, DIN 96P, FEMALE
CN16	1-563-337-11	s	CONNECTOR, DIN 96P, FEMALE
CN17	1-563-337-11	s	CONNECTOR, DIN 96P, FEMALE
CN18	1-563-337-11	s	CONNECTOR, DIN 96P, FEMALE
CN19	1-563-337-11	s	CONNECTOR, DIN 96P, FEMALE
CN20	1-563-337-11	s	CONNECTOR, DIN 96P, FEMALE
CN21	1-563-337-11	s	CONNECTOR, DIN 96P, FEMALE
CN22	1-563-337-11	s	CONNECTOR, DIN 96P, FEMALE
CN23	1-563-337-11	s	CONNECTOR, DIN 96P, FEMALE
CN24	1-563-337-11	s	CONNECTOR, DIN 96P, FEMALE
CN25	1-563-337-11	s	CONNECTOR, DIN 96P, FEMALE
CN26	1-563-337-11	s	CONNECTOR, DIN 96P, FEMALE
CN27	1-563-337-11	s	CONNECTOR, DIN 96P, FEMALE
CN28	1-563-337-11	s	CONNECTOR, DIN 96P, FEMALE
CN29	1-563-337-11	s	CONNECTOR, DIN 96P, FEMALE
CN30	1-563-337-11	s	CONNECTOR, DIN 96P, FEMALE
CN31	1-563-337-11	s	CONNECTOR, DIN 96P, FEMALE
CN32	1-563-337-11	s	CONNECTOR, DIN 96P, FEMALE
CN33	1-563-337-11	s	CONNECTOR, DIN 96P, FEMALE
CN34	1-563-337-11	s	CONNECTOR, DIN 96P, FEMALE
CN35	1-563-337-11	s	CONNECTOR, DIN 96P, FEMALE
CN36	1-563-337-11	s	CONNECTOR, DIN 96P, FEMALE
CN37	1-563-337-11	s	CONNECTOR, DIN 96P, FEMALE
CN38	1-563-337-11	s	CONNECTOR, DIN 96P, FEMALE
CN39	1-563-337-11	s	CONNECTOR, DIN 96P, FEMALE
CN40	1-563-337-11	s	CONNECTOR, DIN 96P, FEMALE
CN41	1-563-337-11	s	CONNECTOR, DIN 96P, FEMALE
CN42	1-563-337-11	s	CONNECTOR, DIN 96P, FEMALE
CN43	1-563-337-11	s	CONNECTOR, DIN 96P, FEMALE
CN44	1-563-337-11	s	CONNECTOR, DIN 96P, FEMALE
CN45	1-563-337-11	s	CONNECTOR, DIN 96P, FEMALE
CN46	1-563-337-11	s	CONNECTOR, DIN 96P, FEMALE
CN47	1-563-337-11	s	CONNECTOR, DIN 96P, FEMALE
CN48	1-563-337-11	s	CONNECTOR, DIN 96P, FEMALE
CN49	1-563-337-11	s	CONNECTOR, DIN 96P, FEMALE
CN50	1-563-337-11	s	CONNECTOR, DIN 96P, FEMALE
CN51	1-580-299-11	o	CONNECTOR, DIN 96P
CN52	1-563-337-11	s	CONNECTOR, DIN 96P, FEMALE
CN53	1-563-337-11	s	CONNECTOR, DIN 96P, FEMALE
CN54	1-580-299-11	o	CONNECTOR, DIN 96P
CN55	1-564-214-11	o	PIN, CONNECTOR 3P

(MB-305 BOARD)

Ref. No. or Q'ty	Part No.	SP	Description
CN56	1-506-472-11	s	CONNECTOR, 7P, MALE
CN57	1-535-869-11	s	INSERT, POWER
CN58	1-535-869-11	s	INSERT, POWER
CN59	1-535-869-11	s	INSERT, POWER
CN60	1-535-869-11	s	INSERT, POWER
CN61	1-535-869-11	s	INSERT, POWER
CN62	1-535-869-11	s	INSERT, POWER
CN63	1-535-869-11	s	INSERT, POWER
CN64	1-535-869-11	s	INSERT, POWER
CN65	1-535-869-11	s	INSERT, POWER
CN66	1-535-869-11	s	INSERT, POWER
CN67	1-535-869-11	s	INSERT, POWER
CN68	1-535-869-11	s	INSERT, POWER
CN69	1-535-869-11	s	INSERT, POWER
CN70	1-535-869-11	s	INSERT, POWER
CN71	1-535-869-11	s	INSERT, POWER
CN72	1-535-869-11	s	INSERT, POWER
CN73	1-535-869-11	s	INSERT, POWER
CN74	1-535-869-11	s	INSERT, POWER
RB1	1-231-399-00	s	RESISTOR BLOCK 330x8
RB2	1-231-400-00	s	RESISTOR BLOCK 390x8
RB3	1-231-399-00	s	RESISTOR BLOCK 330x8
RB4	1-231-400-00	s	RESISTOR BLOCK 390x8
RB5	1-231-399-00	s	RESISTOR BLOCK 330x8
RB6	1-231-400-00	s	RESISTOR BLOCK 390x8
RB7	1-231-399-00	s	RESISTOR BLOCK 330x8
RB8	1-231-400-00	s	RESISTOR BLOCK 390x8
RB9	1-235-452-11	s	RESISTOR BLOCK 330x4
RB10	1-231-499-00	s	RESISTOR BLOCK 390X4

Parts that are not listed in the "reference number order list" are shown in the "General Purpose Electrical Parts List".

MEM-41 BOARD

Ref. No. or Q'ty	Part No.	SP	Description
1pc	A-6259-458-A	o	MOUNTED CIRCIUT BOARD, MEM-41
14pcs	1-526-816-21	o	SOCKET, IC (DP) 24P
2pcs	3-166-184-01	o	LEVER, PC BOARD
6pcs	7-621-773-87	s	SCREW +B 2.6X10
2pcs	7-622-207-05	s	N 2.6, TYPE 2
2pcs	7-626-320-11	s	PIN, SPRING 3X8
8pcs	7-682-948-01	s	SCREW +PSW 3X8
C1	1-124-589-11	s	ELECT 47uF 20% 16V
CN1	1-506-748-11	s	CONNECTOR, DIN 96P, MALE
CN2	1-506-748-11	s	CONNECTOR, DIN 96P, MALE
CN3	1-506-748-11	s	CONNECTOR, DIN 96P, MALE
COP1	1-563-859-11	s	PLUG, SHORTING
COP2	1-563-859-11	s	PLUG, SHORTING
COP3	1-563-859-11	s	PLUG, SHORTING
COR1	1-566-388-11	s	CONNECTOR, 8P, MALE
COR2	1-566-388-11	s	CONNECTOR, 8P, MALE
COR3	1-566-388-11	s	CONNECTOR, 8P, MALE
DL1	1-415-167-00	s	DELAY LINE
F1	1-576-031-11	s	FUSE, MICRO
F2	1-576-031-11	s	FUSE, MICRO
ICA1	8-759-936-60	s	IC SN74ALS273N
ICA2	8-759-904-87	s	IC 74F374PC
ICA3	8-759-904-87	s	IC 74F374PC
ICA4	8-759-917-53	s	IC 74F139PC
ICA5	8-759-904-87	s	IC 74F374PC
ICA6	8-759-505-73	s	IC CY7C199-45PC
ICA7	8-759-505-73	s	IC CY7C199-45PC
ICA9	8-759-904-87	s	IC 74F374PC
ICA10	8-759-505-73	s	IC CY7C199-45PC
ICA11	8-759-505-73	s	IC CY7C199-45PC
ICA13	8-759-904-87	s	IC 74F374PC
ICA14	8-759-505-73	s	IC CY7C199-45PC
ICA15	8-759-505-73	s	IC CY7C199-45PC
ICA17	8-759-904-87	s	IC 74F374PC
ICA19	8-759-990-95	s	IC CXD8158Q
ICA20	8-759-990-95	s	IC CXD8158Q
ICB1	8-759-904-87	s	IC 74F374PC
ICB2	8-759-904-87	s	IC 74F374PC
ICB3	8-759-904-87	s	IC 74F374PC
ICB4	8-759-938-93	s	IC 74F157APC
ICB5	8-759-906-78	s	IC 74F399PC
ICC1	8-759-904-80	s	IC 74F04PC
ICC2	8-759-904-87	s	IC 74F374PC
ICC3	8-759-904-87	s	IC 74F374PC
ICC4	8-759-917-53	s	IC 74F139PC
ICC5	8-759-904-87	s	IC 74F374PC
ICC6	8-759-505-73	s	IC CY7C199-45PC
ICC7	8-759-505-73	s	IC CY7C199-45PC
ICC9	8-759-904-87	s	IC 74F374PC
ICC10	8-759-505-73	s	IC CY7C199-45PC
ICC11	8-759-505-73	s	IC CY7C199-45PC
ICC13	8-759-904-87	s	IC 74F374PC
ICC14	8-759-505-73	s	IC CY7C199-45PC
ICC15	8-759-505-73	s	IC CY7C199-45PC
ICC17	8-759-904-87	s	IC 74F374PC

(MEM-41 BOARD)

Ref. No. or Q'ty	Part No.	SP	Description
ICC19	8-759-990-95	s	IC CXD8158Q
ICC20	8-759-990-95	s	IC CXD8158Q
ICD1	8-759-904-87	s	IC 74F374PC
ICD2	8-759-904-87	s	IC 74F374PC
ICD3	8-759-904-87	s	IC 74F374PC
ICD4	8-759-938-93	s	IC 74F157APC
ICD5	8-759-906-78	s	IC 74F399PC
ICD6	8-759-505-73	s	IC CY7C199-45PC
ICD7	8-759-505-73	s	IC CY7C199-45PC
ICD9	8-759-904-87	s	IC 74F374PC
ICD10	8-759-505-73	s	IC CY7C199-45PC
ICD11	8-759-505-73	s	IC CY7C199-45PC
ICD13	8-759-904-87	s	IC 74F374PC
ICD14	8-759-505-73	s	IC CY7C199-45PC
ICD15	8-759-505-73	s	IC CY7C199-45PC
ICD17	8-759-904-87	s	IC 74F374PC
ICD19	8-759-990-95	s	IC CXD8158Q
ICD20	8-759-990-95	s	IC CXD8158Q
ICE1	8-759-904-77	s	IC AM26LS32ACN
ICE2	8-759-904-87	s	IC 74F374PC
ICE3	8-759-904-87	s	IC 74F374PC
ICE4	8-759-917-53	s	IC 74F139PC
ICE5	8-759-904-87	s	IC 74F374PC
ICE6	8-759-505-73	s	IC CY7C199-45PC
ICE7	8-759-505-73	s	IC CY7C199-45PC
ICE9	8-759-904-87	s	IC 74F374PC
ICE10	8-759-505-73	s	IC CY7C199-45PC
ICE11	8-759-505-73	s	IC CY7C199-45PC
ICE13	8-759-904-87	s	IC 74F374PC
ICE14	8-759-505-73	s	IC CY7C199-45PC
ICE15	8-759-505-73	s	IC CY7C199-45PC
ICE17	8-759-904-87	s	IC 74F374PC
ICE19	8-759-990-95	s	IC CXD8158Q
ICE20	8-759-990-95	s	IC CXD8158Q
ICF1	8-759-904-87	s	IC 74F374PC
ICF2	8-759-904-87	s	IC 74F374PC
ICF3	8-759-904-87	s	IC 74F374PC
ICF4	8-759-938-93	s	IC 74F157APC
ICF5	8-759-906-78	s	IC 74F399PC
ICG1	8-759-904-87	s	IC 74F374PC
ICG2	8-759-904-87	s	IC 74F374PC
ICG3	8-759-904-79	s	IC 74F00PC
ICG4	8-759-904-79	s	IC 74F00PC
ICG5	8-759-904-80	s	IC 74F04PC
ICG6	8-759-904-83	s	IC 74F32PC
ICG7	8-759-913-63	s	IC SN74ALS374N
ICG8	8-759-904-81	s	IC 74F08PC
ICG9	8-759-917-53	s	IC 74F139PC
ICG10	8-759-904-83	s	IC 74F32PC
ICG11	8-759-904-83	s	IC 74F32PC
ICG12	8-759-906-66	s	IC 74F86PC
ICG13	8-759-904-83	s	IC 74F32PC
ICG14	8-759-904-83	s	IC 74F32PC
ICG15	8-759-913-63	s	IC SN74ALS374N
ICG16	8-759-913-63	s	IC SN74ALS374N
ICG17	8-759-904-80	s	IC 74F04PC
ICG18	8-759-706-19	s	IC WS57C291B-MEM41G18V1

Parts that are not listed in the "reference number order list" are shown in the "General Purpose Electrical Parts List".

(MEM-41 BOARD)

Ref. No. or Q'ty	Part No.	SP	Description
ICG19	8-759-948-19	s	IC V74ACT821PS
ICG20	8-759-500-76	s	IC CXD8040G
ICH1	8-759-906-78	s	IC 74F399PC
ICH2	8-759-906-78	s	IC 74F399PC
ICH3	8-759-904-87	s	IC 74F374PC
ICH6	8-759-904-83	s	IC 74F32PC
ICH7	8-759-904-79	s	IC 74F00PC
ICH8	8-759-705-96	s	IC WS57C291B-MEM41H8V1
ICH9	8-759-705-97	s	IC WS57C291B-MEM41H9V1
ICH10	8-759-706-12	s	IC WS57C291B-MEM41H10V1
ICH11	8-759-706-13	s	IC WS57C291B-MEM41H11V1
ICH12	8-759-904-87	s	IC 74F374PC
ICH14	8-759-706-14	s	IC WS57C291B-MEM41H14V1
ICH15	8-759-706-15	s	IC WS57C291B-MEM41H15V1
ICH17	8-759-990-97	s	IC CXD8156Q
ICH19	8-759-948-19	s	IC V74ACT821PS
ICJ2	8-759-918-33	s	IC CX20160
ICJ3	8-759-918-33	s	IC CX20160
ICJ4	8-759-913-63	s	IC SN74ALS374N
ICJ5	8-759-938-93	s	IC 74F157APC
ICJ6	8-759-002-00	s	IC MC74F153N
ICJ7	8-759-904-80	s	IC 74F04PC
ICJ8	8-759-705-92	s	IC WS57C291B-MEM41J8V1
ICJ9	8-759-705-93	s	IC WS57C291B-MEM41J9V1
ICJ10	8-759-705-94	s	IC WS57C291B-MEM41J10V1
ICJ11	8-759-705-95	s	IC WS57C291B-MEM41J11V1
ICJ12	8-759-904-87	s	IC 74F374PC
ICJ13	8-759-706-16	s	IC WS57C291B-MEM41J13V1
ICJ14	8-759-706-17	s	IC WS57C291B-MEM41J14V1
ICJ15	8-759-706-18	s	IC WS57C291B-MEM41J15V1
ICJ16	8-759-904-81	s	IC 74F08PC
ICJ17	8-759-904-81	s	IC 74F08PC
ICJ18	8-759-904-81	s	IC 74F08PC
ICJ19	8-759-948-19	s	IC V74ACT821PS
ICJ20	8-759-500-76	s	IC CXD8040G
S1	1-570-602-11	s	SWITCH, DIP 2-CKT

FRAME

Ref. No. or Q'ty	Part No.	SP	Description
4pcs	1-249-408-11	s	CARBON 180 5% 1/4W
1pc	⚠1-413-477-12	s	REGULATOR, SWITCHING (EWS50-5)
1pc	⚠1-413-569-11	s	REGULATOR, SWITCHING (LWT-4HA522)
1pc	⚠1-413-594-11	s	SWITCHING REGULATOR (EWS600-5)
1pc	⚠1-424-136-11	s	FILTER, NOISE
1pc	1-506-468-11	o	CONNECTOR, 3P, MALE
1pc	⚠1-540-178-11	s	INLET, AC (GL-2100C-30)
3pcs	1-541-329-31	s	FAN, DC (WITH ALARM)
1pc	⚠1-572-345-11	s	SWITC, SEESAW (AC POWER)
1pc	1-631-489-11	o	PC BOARD, LE-76
4pcs	8-719-920-05	s	DIODE TLG123A
HARNESS (MB1)			
	1-535-427-00	o	TERMINAL, SOLDERLESS
	1-580-352-11	o	HOUSING, CONNECTOR 20P
	1-580-359-21	o	TERMINAL, CONNECTOR SOLDERLESS
	1-580-360-21	o	TERMINAL, CONNECTOR SOLDERLESS
HARNESS(MB2)			
	1-535-321-11	o	TERMINAL, SOLDERLESS
	1-535-427-00	o	TERMINAL, SOLDERLESS
	1-562-210-11	s	CONTACT, FEMALE AWG18-22
	1-562-211-11	o	HOUSING, CONNECTOR 3P
	1-569-200-11	o	HOUSING, CONNECTOR 7P
	1-580-352-11	o	HOUSING, CONNECTOR 20P
	1-580-358-21	o	TERMINAL, CONNECTOR SOLDERLESS
	1-580-359-21	o	TERMINAL, CONNECTOR SOLDERLESS
	1-580-360-21	o	TERMINAL, CONNECTOR SOLDERLESS
HARNESS(AC SW)			
	1-535-316-11	s	TERMINAL, GROUND (M4)
	⚠1-535-321-11	o	TERMINAL, SOLDERLESS
	1-535-446-00	o	TERMINAL, FASTEN
	1-563-156-11	o	TERMINAL
	⚠1-576-036-11	s	BREAKER, CIRCUIT 6A 250V
	3-723-892-01	o	COVER, CIRCUIT BREAKER
HARNESS (AC1)			
	1-535-321-11	o	TERMINAL, SOLDERLESS
	1-535-340-11	o	TERMINAL, SOLDERLESS
	1-535-341-11	o	TERMINAL, SOLDERLESS
	1-562-210-11	s	CONTACT, FEMALE AWG18-22
	1-562-286-11	o	HOUSING, CONNECTOR 5P
HARNESS(DC1)			
	1-535-690-11	o	TERMINAL, SOLDERLESS
	1-580-349-11	o	HOUSING, CONNECTOR 20P
	1-580-359-21	o	TERMINAL, CONNECTOR SOLDERLESS
	1-580-360-21	o	TERMINAL, CONNECTOR SOLDERLESS
HARNESS(DC2)			
	1-535-321-11	o	TERMINAL, SOLDERLESS
	1-535-341-11	o	TERMINAL, SOLDERLESS
	1-562-210-11	s	CONTACT, FEMALE AWG18-22
	1-562-833-11	o	HOUSING, 7P
	1-569-196-11	o	HOUSING, CONNECTOR 3P
	1-569-197-11	o	HOUSING, CONNECTOR 4P
	1-580-349-11	o	HOUSING, CONNECTOR 20P
	1-580-358-21	o	TERMINAL, CONNECTOR SOLDERLESS
	1-580-359-21	o	TERMINAL, CONNECTOR SOLDERLESS
	1-580-360-21	o	TERMINAL, CONNECTOR SOLDERLESS

Parts that are not listed in the "reference number order list" are shown in the "General Purpose Electrical Parts List".

PACKING MATERIALS & SUPPLIED ACCESSORIES

Ref. No. or Q'ty	Part No.	SP	Description
1pc	A-6279-735-A	s	EX-270 ASSY
1pc	⚠1-506-411-21	s	ADAPTOR, AC PLUG 3P-2P
1pc	⚠1-557-377-11	s	CORD, POWER
1pc	1-569-221-11	o	CONNECTOR, BNC (WITH RESISTOR)
1pc	2-990-242-01	o	HOLDER (B), PLUG
1pc	3-701-640-00	s	BAG, POLYETHYLENE
1pc	3-701-648-00	s	BAG, POLYETHYLENE

Parts that are not listed in the "reference number order list" are shown in the "General Purpose Electrical Parts List".